San Joaquin Valley
AIR POLLUTION CONTROL DISTRICT

HEALTHY AIR LIVING™

JUL 14 2011

Mr. Robert Richards
Kern Oil & Refining Company
7724 E Panama Lane
Bakersfield, CA

Re: Proposed ATC / Certificate of Conformity (Significant Mod)
District Facility # S-37
Project # 1111779

Dear Mr. Richards:

Enclosed for your review is the District's analysis of an application for Authorities to Construct for the facility identified above. The applicant is requesting that Certificates of Conformity with the procedural requirements of 40 CFR Part 70 be issued with this project. The project clarifies approval of unloading of organic liquids at existing Transfer Racks N and F (S-37-8) and new Unloading Rack S (S-37-147).

After addressing any EPA comments made during the 45-day comment period, the Authorities to Construct will be issued to the facility with Certificates of Conformity. Prior to operating with modifications authorized by the Authorities to Construct, the facility must submit an application to modify the Title V permit as an administrative amendment, in accordance with District Rule 2520, Section 11.5.

If you have any questions, please contact Mr. Leonard Scandura, Permit Services Manager, at (661) 392-5500.

Thank you for your cooperation in this matter.

Sincerely,

David Warner
Director of Permit Services

Enclosures
c: Richard Edgehill, Permit Services

Seyed Sadredin
Executive Director/Air Pollution Control Officer

Northern Region
4800 Enterprise Way
Modesto, CA 95356-8718
Tel: (209) 557-6400 FAX: (209) 557-6475

Central Region (Main Office)
1990 E. Gettysburg Avenue
Fresno, CA 93726-0244
Tel: (559) 230-6000 FAX: (559) 230-6061

Southern Region
34946 Flyover Court
Bakersfield, CA 93308-9725
Tel: 661-392-5500 FAX: 661-392-5585

www.valleyair.org www.healthyairliving.com

San Joaquin Valley
AIR POLLUTION CONTROL DISTRICT

HEALTHY AIR LIVING™

JUL 14 2011

Gerardo C. Rios, Chief
Permits Office
Air Division
U.S. EPA - Region IX
75 Hawthorne St.
San Francisco, CA 94105

Re: Proposed ATC / Certificate of Conformity (Significant Mod)
District Facility # S-37
Project # 1111779

Dear Mr. Rios:

Enclosed for your review is the District's engineering evaluation of an application for Authorities to Construct for Kern Oil & Refining Company 7724 E Panama Lane, Bakersfield, CA, which has been issued a Title V permit. Kern Oil & Refining Company is requesting that Certificates of Conformity, with the procedural requirements of 40 CFR Part 70, be issued with this project. The project clarifies approval of unloading of organic liquids at existing Transfer Racks N and F (S-37-8) and new Unloading Rack S (S-37-147).

Enclosed is the engineering evaluation of this application with a copy of the current Title V permit and proposed Authorities to Construct # S-37-8-29 and '-147-0 with Certificates of Conformity. After demonstrating compliance with the Authority to Construct, the conditions will be incorporated into the facility's Title V permit through an administrative amendment.

Please submit your written comments on this project within the 45-day comment period that begins on the date you receive this letter. If you have any questions, please contact Mr. Leonard Scandura, Permit Services Manager, at (661) 392-5500.

Thank you for your cooperation in this matter.

Sincerely,

David Warner
Director of Permit Services

DW:RE/dg

Enclosures

Seyed Sadredin
Executive Director/Air Pollution Control Officer

Northern Region
4800 Enterprise Way
Modesto, CA 95356-8718
Tel: (209) 557-6400 FAX: (209) 557-6475

Central Region (Main Office)
1990 E. Gettysburg Avenue
Fresno, CA 93726-0244
Tel: (559) 230-6000 FAX: (559) 230-6061

Southern Region
34946 Flyover Court
Bakersfield, CA 93308-9725
Tel: 661-392-5500 FAX: 661-392-5585

www.valleyair.org www.healthyairliving.com

San Joaquin Valley
AIR POLLUTION CONTROL DISTRICT

HEALTHY AIR LIVING™

JUL 14 2011

Mike Tollstrup, Chief
Project Assessment Branch
Air Resources Board
P O Box 2815
Sacramento, CA 95812-2815

Re: Proposed ATC / Certificate of Conformity (Significant Mod)
District Facility # S-37
Project # 1111779

Dear Mr. Tollstrup:

Enclosed for your review is the District's analysis of an application for Authorities to Construct for the facility identified above. The applicant is requesting that Certificates of Conformity with the procedural requirements of 40 CFR Part 70 be issued with this project. The project clarifies approval of unloading of organic liquids at existing Transfer Racks N and F (S-37-8) and new Unloading Rack S (S-37-147).

Enclosed is the engineering evaluation of this application with a copy of the current Title V permit and proposed Authorities to Construct # S-37-8-29 and '-147-0 with Certificates of Conformity. After demonstrating compliance with the Authorities to Construct, the conditions will be incorporated into the facility's Title V permit through an administrative amendment.

Please submit your written comments on this project within the 30-day comment period that begins on the date you receive this letter. If you have any questions, please contact Mr. Leonard Scandura, Permit Services Manager, at (661) 392-5500.

Thank you for your cooperation in this matter.

Sincerely,

David Warner
Director of Permit Services

DW:RE/dg

Enclosures

Seyed Sadredin
Executive Director/Air Pollution Control Officer

Northern Region
4800 Enterprise Way
Modesto, CA 95356-8718
Tel: (209) 557-6400 FAX: (209) 557-6475

Central Region (Main Office)
1990 E. Gettysburg Avenue
Fresno, CA 93726-0244
Tel: (559) 230-6000 FAX: (559) 230-6061

Southern Region
34946 Flyover Court
Bakersfield, CA 93308-9725
Tel: 661-392-5500 FAX: 661-392-5585

www.valleyair.org www.healthyairliving.com

Bakersfield Californian

NOTICE OF PRELIMINARY DECISION
FOR THE ISSUANCE OF AUTHORITY TO CONSTRUCT AND
THE PROPOSED SIGNIFICANT MODIFICATION OF FEDERALLY
MANDATED OPERATING PERMIT

NOTICE IS HEREBY GIVEN that the San Joaquin Valley Air Pollution Control District solicits public comment on the proposed modification of Kern Oil & Refining Company for its liquid transfer operations at oil refinery 7724 E Panama Lane, Bakersfield, CA, California. The project clarifies approval of unloading of organic liquids at existing Transfer Racks N and F (S-37-8) and new Unloading Rack S (S-37-147).

The District's analysis of the legal and factual basis for this proposed action, project #1111779, is available for public inspection at http://www.valleyair.org/notices/public_notices_idx.htm and the District office at the address below. This will be the public's only opportunity to comment on the specific conditions of the modification. If requested by the public, the District will hold a public hearing regarding issuance of this modification. For additional information, please contact Mr. Jim Swaney, Permit Services Manager, at (559) 230-5900. Written comments on the proposed initial permit must be submitted within 30 days of the publication date of this notice to DAVID WARNER, DIRECTOR OF PERMIT SERVICES, SAN JOAQUIN VALLEY AIR POLLUTION CONTROL DISTRICT, 1990 E. GETTYSBURG AVE, FRESNO, CA 93726-0244.

San Joaquin Valley Air Pollution Control District
Authority to Construct
Application Review

Facility Name:	Kern Oil & Refining Company	Date:	July 12, 2011
Mailing Address:	7724 E. Panama Ln	Engineer:	Richard Edgehill
	Bakersfield, CA 93307	Lead Engineer:	Allan Phillips
Contact Person:	Melinda Hicks – Senior EHS Advisor (661) 845-0761, cell = 808-8729, or Robert Richards – EHS Manager rrichards@kernoil.com		
Telephone:	(661) 845-0761		
Application #:	S-37-8-29 and 147-0		
Project #:	S-1111779		
Deemed Complete:	June 2, 2011		

I. Proposal

Kern Oil & Refining Company (Kern) is requesting Authorities to Construct (ATCs) to revise Transfer Racks N and F permitted under PTO S-37-8, to allow for the unloading of various organic liquids. Transfer Racks N and F are currently permitted to load finished fuels into tanker trucks for delivery offsite, however, they have historically been used to unload as well. District practice did not distinguish between loading and unloading operations. Therefore, this change is solely a "correction" to the current permit. The organic liquids to be unloaded are similar in physical properties (gravity, vapor pressure, etc.) to the materials currently loaded (diesel fuel, finished gasoline, naphtha range intermediates, and reformulated gasoline blendstocks).

Kern is also requesting authorization of Unloading Rack S (ATC S-38-147-0) which will be used to unload the same types of liquids as S-37-8. Unloading Rack S is currently permit exempt as it transfers small amounts of high boiling point (>302°F) organic liquids.

Disposition of Outstanding ATCs
Applicant has stated that ATC S-37-8-27 may not be implemented. Therefore, PTO S-37-8-26 serves as the base document and is included in **Attachment I**.

Kern received their Title V Permit on December 17, 2002. The project is a Federal Major Modification and therefore it is classified as a Title V Significant Modification pursuant to Rule 2520, Section 3.20, and can be processed with a Certificate of Conformity (COC). Since the facility has specifically requested that this project be processed in that manner, the 45-day EPA comment period will be satisfied prior to the issuance of the Authority to Construct. Kern must apply to administratively amend their Title V Operating Permit to include the requirements of the ATC(s) issued with this project.

II. Applicable Rules

Rule 2201 New and Modified Stationary Source Review Rule (4/21/11)
Rule 2520 Federally Mandated Operating Permits (6/21/01)

Rule 4001 **New Source Performance Standards (4/14/99)** – Subpart J Standards of Performance for Petroleum Refineries – **not applicable** - the loading rack is not a FCC catalyst regenerator, fuel gas combustion device, or Claus sulfur recovery plant ; Subpart GGG –Standards of Performance for Equipment Leaks of VOC at Petroleum Refineries (and by reference Subpart VV Standards of Performance for Equipment Leaks of VOC in the Synthetic Organic Chemicals Manufacturing Industry)
Subpart Ja – **not applicable** – the loading rack being modified is not part of the sulfur recovery plant

Rule 4101 Visible Emissions (02/17/05)
Rule 4102 Nuisance (12/17/92)
Rule 4621 Gasoline Transfer into Stationary Storage Containers, Delivery Vessels, and Bulk Plants (12/20/07)
Rule 4624 Transfer of Organic Liquid (12/20/07)
CH&SC 41700 Health Risk Assessment
CH&SC 42301.6 School Notice
Public Resources Code 21000-21177: California Environmental Quality Act (CEQA)
California Code of Regulations, Title 14, Division 6, Chapter 3, Sections 15000-15387: CEQA Guidelines

III. Project Location

The facility is located at 7724 E. Panama Lane in Bakersfield, CA. The equipment is not located within 1,000 feet of the outer boundary of a K-12 school. Therefore, the public notification requirement of California Health and Safety Code 42301.6 is not applicable to this project.

IV. Process Description

Kern Oil and Refining Company operates a petroleum refining operation engaged in the production of petroleum distillates. Applicant is requesting authorization to unload organic liquids at three loading racks.

S-37-8
Transfer Racks N (North Cat Gas Rack) and F (Naphtha rack) are used to unload organic liquids similar to materials currently authorized for loading. Loading Racks A, K, and L, also included in S-37-8, will not be modified.

Transfer Rack N is equipped with a 30 hp pump, one hose for truck connections and one vapor return hose. There is the potential for 24 trucks per day (up to 48 disconnects). Transfer Rack F has a 30 hp pump, one hose for truck connections, one vapor return hose, and one pressurized unloading hose accompanied by a fuel gas hose to facilitate complete purge of bullet tanks. Transfer Rack F has the potential of 10 trucks per day (up to 20 disconnects).

The liquids unloaded at Transfer Racks N and F are transferred to storage tanks in compliance with vapor control requirements of Rule 4623. Please note that because the changes to Transfer Racks N and F are solely a clarification of the existing permits, the changes to the permit are not NSR modifications.

Applicant has proposed the following equipment description (changes from current PTO with strikeout of deleted words and new words underlined):

ORGANIC LIQUID LOADING/UNLOADING AREAS AND REFINERY VAPOR RECOVERY SYSTEM INCLUDING COMPRESSOR(S), LOADING RACKS WITH UP TO 22 PRODUCT LINES AND UP TO ~~18~~ 15 VAPOR ~~RETURN~~ RECOVERY LINES

S-37-147-0
Unloading Rack S was historically exempt as it transferred small amounts of liquids with a boiling point greater than 302°F (Rule 2020 Section 6.6.5). Applicant has requested authorization to use Unloading Rack S for nonexempt liquids.

Unloading Rack S is equipped with a 30 hp pump and one unloading spot for receiving cargo tanker trucks and will receive liquids from up to 10 trucks per day (up to 20 disconnections per day).

Applicant has proposed the following equipment description:

ORGANIC LIQUID UNLOADING RACK (RACK S) – SOUTH OF DIESEL TANK FARM

Process diagrams, a plot plan, and facility photograph are included in **Attachment II**.

V. Equipment Listing

Pre-Project Equipment Description:

S-37-8-26: ORGANIC LIQUID LOADING AREAS AND REFINERY VAPOR RECOVERY SYSTEM INCLUDING COMPRESSOR(S), LOADING RACKS WITH UP TO 22 PRODUCT LINES AND UP TO 18 VAPOR RETURN LINES

Proposed Modification:

S-37-8-29: MODIFICATION OF ORGANIC LIQUID LOADING AREAS AND REFINERY VAPOR RECOVERY SYSTEM INCLUDING COMPRESSOR(S), LOADING RACKS WITH UP TO 22 PRODUCT LINES AND UP TO 18 VAPOR RETURN LINES: CLARIFY THAT TRANSFER RACKS N AND F MAY BE USED FOR LOADING AND UNLOADING

Post Project Equipment Description:

S-37-8-29: ORGANIC LIQUID LOADING AREAS AND REFINERY VAPOR RECOVERY SYSTEM INCLUDING COMPRESSOR(S), LOADING RACKS WITH UP TO 22 PRODUCT LINES AND UP TO 15 VAPOR RECOVERY LINES

S-37-147-0: ORGANIC LIQUID UNLOADING RACK (RACK S) – SOUTH OF DIESEL TANK FARM

VI. Emission Control Technology Evaluation

Loading Racks N, F, and S will be authorized to organic liquids which will be sent to tanks under vapor control. VOC emissions from fugitive emissions components and truck disconnects are expected. However, VOC emissions from fugitive component leaks will be minimized with implementation of a leak detection and repair program, as required by Rules 4621 and 4624. Applicant has proposed to configure the unloading hose and pump to result in no excess liquid drainage during disconnections.

Unloading Emissions Control

Kern will utilize appropriate engineering design and operational procedures to ensure that there are no leaks or excess organic liquid drainage at disconnections. As illustrated in **Attachment II**, the cargo tanker, unloading hose, and associated connections will be configured with a difference in elevation between the connection at the tanker and the inlet to the pump. Placement of the pump suction at this lower level facilitates gravity drainage in addition to the pump suction and eliminates low spots in the unloading hose where liquids might otherwise collect.

Drivers are instructed to unload in the proper sequence – first closing the valve at the truck, then closing the valve upstream of the pump, followed by switching the transfer pump off. This sequence of operations ensures that the hose and lines are completely evacuated of liquid prior to disconnection.

More details concerning this are included in the BACT analysis (**Attachment IV**).

VII. General Calculations

A. Assumptions

- Facility operates 24 hr/day, 365 day/yr
- Number of disconnects at Unloading Rack S (20/day - per applicant)
- Volume of spills from disconnects, 10 mL (Rule 4624)
- VOC content of spilled oil, 100% and all evaporates (assumed)
- VOC emissions consist of fugitive component emissions and disconnects
- Unloading rack emits only volatile organic compounds (VOCs)
- Density of California crude oil is 0.915 g/ml at 60° F (past Kern Oil approvals)
- Number of leaking and non-leaking fugitive emissions components located at Loading Rack S are listed in the table below.

S-37-147 (Unloading Rack S)

Component Type	Service Type	Non-Leaking	Leaking	Total
Valves	Light liquid	15	1	16
Pump seals	Light liquid	1	0	1
Others (other than pump seals, fittings, and valves)	Light Liquid	8	0	8
Fittings (connectors & flanges)	Light liquid	80	4	84

- The proposed change to S-37-8 is not a NSR Modification. Therefore only PE2 will be calculated for inclusion in the PAS emissions profile.

B. Emission Factors

Fugitive component VOC emissions will be calculated using CAPCOA Screening Range Emissions factors for Marketing Terminals, from California Implementation Guidelines for Estimating Emissions of Fugitive Hydrocarbon Leaks at Marketing Terminals, Table IV-2b, February 1999.

C. Calculations

1. Pre-Project Potential to Emit (PE1)

S-37-147

Since this is a new emissions unit, PE1 = 0 for all pollutants.

2. Post Project Potential to Emit (PE2)

PTO S-37-8-26

10. VOC emission rate from diesel loading rack shall not exceed any of the following: Fugitive emissions: 0.12 lb/hr and vapor recovery system: 0.09 lb/hr. [District Rule 2201] Y

11. VOC emission rate from fugitive components associated with the refinery vapor control system shall not exceed 6.9 lb/day. [District Rule 2201] Y

PE2 = (0.12 + 0.09) x 24 + 6.9 = 11.9 lb/day (4358 lb/yr)

S-37-147

Disconnects:
(10 ml/leak)(0.915 g/mL)(lb/454 g)(20 disconnects/day) = 0.403 lb VOC/day
= 147 lb-VOC/year

Fugitive component emissions:
2.2 lb/kg x 24 hr/day x [15 x 0.000015 kg/hr valve + 1 x 0.00024 kg/hr pump seal + 8 x 0.000024 kg/hr others + 80 x 0.0000072 fitting + 1 x 0.023 kg/hr leaking valve + 4 x 0.0065 leaking fitting]
= 2.65 lb/day (968 lb/yr)

VOC

Post-Project Potential to Emit (PE2)		
	Daily Emissions (lb/day)	Annual Emissions (lb/year)
S-37-8	11.9	4,358
S-37-147	0.4 + 2.7 = 3.1	147 + 968 = 1,115

Greenhouse Gas (GHG) Emissions

Fugitive emissions from Loading Rack S do not consist of Greenhouse Gases (GHG). Therefore no increase in GHG is expected.

Emissions profiles are included in **Attachment III**.

3. Pre-Project Stationary Source Potential to Emit (SSPE1)

Pursuant to Section 4.9 of District Rule 2201, the Pre-Project Stationary Source Potential to Emit (SSPE1) is the Potential to Emit (PE) from all units with valid Authorities to Construct (ATC) or Permits to Operate (PTO) at the Stationary Source and the quantity of emission reduction credits (ERC) which have been banked since September 19, 1991 for Actual Emissions Reductions that have occurred at the source, and which have not been used on-site.

Facility emissions are already above the Offset and Major Source Thresholds for VOC emissions; therefore, SSPE1 calculations are not necessary.

4. Post Project Stationary Source Potential to Emit (SSPE2)

Pursuant to Section 4.10 of District Rule 2201, the Post Project Stationary Source Potential to Emit (SSPE2) is the Potential to Emit (PE) from all units with valid Authorities to Construct (ATC) or Permits to Operate (PTO) at the Stationary Source and the quantity of emission reduction credits (ERC) which have been banked since September 19, 1991 for Actual Emissions Reductions that have occurred at the source, and which have not been used on-site.

Facility emissions are already above the Offset and Major Source Thresholds for VOC emissions; therefore, SSPE2 calculations are not necessary.

5. Major Source Determination

Pursuant to Section 3.24 of District Rule 2201, a Major Source is a stationary source with post-project emissions or a Post Project Stationary Source Potential to Emit (SSPE2), equal to or exceeding one or more of the following threshold values. However, Section 3.24.2 states, "for the purposes of determining major source status, the SSPE2 shall not include the quantity of emission reduction credits (ERC) which have been banked since September 19, 1991 for Actual Emissions Reductions that have occurred at the source, and which have not been used on-site."

This source is an existing Major Source for VOC emissions and will remain a Major Source for VOC. No change in other pollutants are proposed or expected as a result of this project.

6. Baseline Emissions (BE)

The BE calculation (in lbs/year) is performed pollutant-by-pollutant for each unit within the project, to calculate the QNEC and if applicable, to determine the amount of offsets required.

Pursuant to Section 3.7 of District Rule 2201, BE = Pre-project Potential to Emit for:

- Any unit located at a non-Major Source,
- Any Highly-Utilized Emissions Unit, located at a Major Source,
- Any Fully-Offset Emissions Unit, located at a Major Source, or
- Any Clean Emissions Unit, located at a Major Source.

otherwise,

BE = Historic Actual Emissions (HAE), calculated pursuant to Section 3.22 of District Rule 2201.

S-36-147

Since this is a new emissions unit, BE = PE1 = 0 for all pollutants.

7. SB 288 Major Modification

Major Modification is defined in 40 CFR Part 51.165 as "*any physical change in or change in the method of operation of a major stationary source that would result in a significant net emissions increase of any pollutant subject to regulation under the Act.*"

As discussed in Section VII.C.5 above, the facility is an existing Major Source for VOC; however, the project by itself would need to be a significant increase in order to trigger a Major Modification. The emissions units within this project do not have a total potential to emit which is greater than Major Modification thresholds (see table below). Therefore, the project cannot be a significant increase and the project does not constitute a SB 288 Major Modification.

SB 288 Major Modification Thresholds (Existing Major Source)			
Pollutant	Project PE (lb/year)	Threshold (lb/year)	Major Modification?
NO_x	0	50,000	No
SO_x	0	80,000	No
PM_{10}	0	30,000	No
VOC	1115	50,000	No

8. Federal Major Modification

District Rule 2201, Section 3.17 states that Federal Major Modifications are the same as "Major Modification" as defined in 40 CFR 51.165 and part D of Title I of the CAA. SB 288 Major Modifications are not Federal Major Modifications if they meet the criteria of the "Less-Than-Significant Emissions Increase" exclusion.

A Less-Than-Significant Emissions Increase exclusion is for an emissions increase for the project, or a Net Emissions Increase for the project (as defined in 40 CFR 51.165 (a)(2)(ii)(B) through (D), and (F)), that is not significant for a given regulated NSR pollutant, and therefore is not a Federal Major Modification for that pollutant.

- To determine the post-project projected actual emissions from existing units, the provisions of 40 CFR 51.165 (a)(1)(xxviii) shall be used.
- To determine the pre-project baseline actual emissions, the provisions of 40 CFR 51.165 (a)(1)(xxxv)(A) through (D) shall be used.
- If the project is determined not to be a Federal Major Modification pursuant to the provisions of 40 CFR 51.165 (a)(2)(ii)(B), but there is a reasonable possibility that the project may result in a significant emissions increase, the owner or operator shall comply with all of the provisions of 40 CFR 51.165 (a)(6) and (a)(7).
- Emissions increases calculated pursuant to this section are significant if they exceed the significance thresholds specified in the table below.

Pollutant	Threshold (lb/year)
VOC	0
NOx	0
PM10	30,000
SOx	80,000

The Net Emissions Increases (NEIs) for purposes of determination of a "Less-Than-Significant Emissions Increase" exclusion will be calculated below to determine if this project qualifies for such an exclusion.

<u>Net Emission Increase for New Unit (NEI)</u>

Per 40 CFR 51.165 (a)(2)(ii)(D) for new emissions unit in this project,

NEI = PE2 - BAE

BAE = 0 for the new emissions unit; therefore,

NEI = PE2

Units S-37-147 is a new unit, and baseline actual emissions are equal to zero, and therefore, pursuant to 40 CFR 51.165 (a)(2)(ii)(D), the Net Emissions Increases are equal to the post-project potential to emit.

NEI = 3.1 lb/day (1115 lb/yr)

As the threshold for VOC in the above table is exceeded, the project is a Federal Major Modification.

9. Quarterly Net Emissions Change (QNEC)

The QNEC is calculated solely to establish emissions that are used to complete the District's PAS emissions profile screen. As S-37-147 is a new emissions unit, QNEC for VOCs is PE/4 (and zero for NOx, SOx, PM10, and CO).

VIII. Compliance

Rule 2201 New and Modified Stationary Source Review Rule

A. Best Available Control Technology (BACT)

1. BACT Applicability

BACT requirements are triggered on a pollutant-by-pollutant basis and on an emissions unit-by-emissions unit basis. Unless exempted pursuant to Section 4.2, BACT shall be required for the following actions:*:

a. Any new emissions unit with a potential to emit exceeding two pounds per day,
b. The relocation from one Stationary Source to another of an existing emissions unit with a potential to emit exceeding two pounds per day,
c. Modifications to an existing emissions unit with a valid Permit to Operate resulting in an AIPE exceeding two pounds per day, and/or
d. Any new or modified emissions unit, in a stationary source project, which results in an SB288 Major Modification or a Federal Major Modification, as defined by the rule.

*Except for CO emissions from a new or modified emissions unit at a Stationary Source with an SSPE2 of less than 200,000 pounds per year of CO.

a. New emissions units – PE > 2 lb/day

As seen in Section VII.C.2 of this evaluation, the applicant is proposing to authorize an organic liquid transfer facility with a PE greater than 2 lb/day for VOC and therefore BACT is triggered.

b. Relocation of emissions units – PE > 2 lb/day

As discussed in Section I above, there are no emissions units being relocated from one stationary source to another; therefore BACT is not triggered.

c. Modification of emissions units – AIPE > 2 lb/day

As discussed in Section I above, there are no modified emissions units associated with this project; therefore BACT is not triggered.

d. SB 288/Federal Major Modification

As discussed in Section VII.C.7 above, this project does constitute a Federal Major Modification for VOC emissions; therefore BACT is triggered for VOC.

2. BACT Guideline

BACT Guideline 7.1.14, "Light Crude Oil loading Rack", covers operations substantially similar to Unloading Rack S (S-37-147). As such BACT Guideline 7.1.4 will be used to establish BACT. Please see **Attachment IV**.

3. Top-Down BACT Analysis

Per Permit Services Policies and Procedures for BACT, a Top-Down BACT analysis shall be performed as a part of the application review for each application subject to the BACT requirements pursuant to the District's NSR Rule.

Pursuant to the attached Top-Down BACT Analysis (see **Attachment V**), BACT has been satisfied with the following:

VOC: engineering design and operational procedures to ensure that there are no leaks or excess organic liquid drainage at disconnections

B. Offsets

1. Offset Applicability

Pursuant to Section 4.5.3, offset requirements shall be triggered on a pollutant by pollutant basis and shall be required if the Post Project Stationary Source Potential to Emit (SSPE2) equals to or exceeds the offset threshold levels in Table 4-1 of Rule 2201.

The following table compares the post-project facility-wide annual emissions in order to determine if offsets will be required for this project.

Offset Determination (lb/year)					
	NO_X	SO_X	PM_{10}	CO	VOC
Post Project SSPE (SSPE2)	>20,000	>54,750	>29,200	>200,000	> 20,000
Offset Threshold	20,000	54,750	29,200	200,000	20,000
Offsets calculations required?	Yes	Yes	Yes	Yes	Yes

2. Quantity of Offsets Required

As seen above, the SSPE2 is greater than the offset thresholds for VOCs and no other pollutant are being emitted from S-37-147; therefore offset calculations will be required for this project.

Per Sections 4.7.1 and 4.7.3, the quantity of offsets in pounds per year for NO_X is calculated as follows for sources with an SSPE1 greater than the offset threshold levels before implementing the project being evaluated.

Offsets Required (lb/year) = (Σ[PE2 – BE] + ICCE) x DOR, for all new or modified emissions units in the project,

Where,
PE2 = Post Project Potential to Emit, (lb/year)
BE = Baseline Emissions, (lb/year)
ICCE = Increase in Cargo Carrier Emissions, (lb/year)
DOR = Distance Offset Ratio, determined pursuant to Section 4.8

BE = Pre-project Potential to Emit for:

- Any unit located at a non-Major Source,
- Any Highly-Utilized Emissions Unit, located at a Major Source,
- Any Fully-Offset Emissions Unit, located at a Major Source, or
- Any Clean Emissions Unit, Located at a Major Source.

otherwise,

BE = Historic Actual Emissions (HAE)

The facility is proposing to install a new emissions unit; therefore Baseline Emissions are equal to zero. Also, there is only one emissions unit associated with this project and there are no increases in cargo carrier emissions; therefore offsets can be determined as follows:

Offsets Required (lb/year) = ([PE2 – BE] + ICCE) x DOR

PE2 (VOCs) = 1115 lb/year
BE (VOCs) = 0 lb/year
ICCE = 0 lb/year

The project is a Federal Major Modification and therefore the correct offset ratio for NOx and VOCs is 1.5:1.

Assuming an offset ratio of 1.5:1, the amount of VOC ERCs that need to be withdrawn is:

Offsets Required (lb/year) = ([1,115 – 0] + 0) x 1.5
= 1,115 x 1.5
= 1,673 lb VOCs/year

Calculating the appropriate quarterly emissions to be offset is as follows:

DOR = 1.0

1st Quarter	2nd Quarter	3rd Quarter	4th Quarter
279	279	279	279

DOR = 1.5

1st Quarter	2nd Quarter	3rd Quarter	4th Quarter
418	418	418	418

The applicant has stated that the facility plans to use ERC certificate S-2882-1 to offset the increases in VOC emissions associated with this project. The ERC is also reserved for project S37, 1094422 and has the following available quarterly VOC credits:

	1st Quarter	2nd Quarter	3rd Quarter	4th Quarter
ERC #S-2882-1	1,370	1,384	1,369	1,517
Project S37, 1094422	503	503	503	503
Available ERCs	867	881	866	1,014

As seen above, the facility has sufficient credits to fully offset the quarterly VOC emissions increases associated with this project.

Proposed Rule 2201 (offset) Conditions:

Prior to operating equipment under this Authority to Construct, permittee shall surrender VOC emission reduction credits for the following quantity of emissions: 1st quarter - 418 lb, 2nd quarter - 418 lb, 3rd quarter - 418 lb, and fourth quarter - 418 lb. Offsets include the applicable offset ratio specified in Section 4.8 of Rule 2201 (as amended 4/21/11). [District Rule 2201] Y [District Rule 2201]

ERC Certificate Number S-2882-1 (or a certificate split from this certificate) shall be used to supply the required offsets, unless a revised offsetting proposal is received and approved by the District, upon which this Authority to Construct shall be reissued, administratively specifying the new offsetting proposal. Original public noticing requirements, if any, shall be duplicated prior to reissuance of this Authority to Construct. [District Rule 2201]

C. Public Notification

1. Applicability

Public noticing is required for:

a. New Major Sources, Federal Major Modifications, and SB288 Major Modifications,
b. Any new emissions unit with a Potential to Emit greater than 100 pounds during any one day for any one pollutant,
c. Any project which results in the offset thresholds being surpassed, and/or
d. Any project with an SSIPE of greater than 20,000 lb/year for any pollutant.

a. New Major Sources, Federal Major Modifications, and SB288 Major Modifications

As demonstrated in VII.C.7, this project is a Federal Major Modification; therefore, public noticing for SB 288 or Federal Major Modification purposes is required.

b. PE > 100 lb/day

Applications which include a new emissions unit with a Potential to Emit greater than 100 pounds during any one day for any pollutant will trigger public noticing requirements. As seen in Section VII.C.2 above, this project does not include a new emissions unit which has daily emissions greater than 100 lb/day for any pollutant, therefore public noticing for PE > 100 lb/day purposes is not required.

c. Offset Threshold

The following table compares the SSPE1 with the SSPE2 in order to determine if any offset thresholds have been surpassed with this project.

Offset Threshold				
Pollutant	SSPE1 (lb/year)	SSPE2 (lb/year)	Offset Threshold	Public Notice Required?
NO_X	>20,000 lb/year	>20,000 lb/year	20,000 lb/year	No
SO_X	>54,750 lb/year	>54,750 lb/year	54,750 lb/year	No
PM_{10}	>29,200 lb/year	>29,200 lb/year	29,200 lb/year	No
CO	>200,000 lb/year	>200,000 lb/year	200,000 lb/year	No
VOC	>20,000 lb/year	>20,000 lb/year	20,000 lb/year	No

As detailed above, there were no thresholds surpassed with this project; therefore public noticing is not required for offset purposes.

d. SSIPE > 20,000 lb/year

Public notification is required for any permitting action that results in a Stationary Source Increase in Permitted Emissions (SSIPE) of more than 20,000 lb/year of any affected pollutant. According to District policy, the SSIPE is calculated as the Post Project Stationary Source Potential to Emit (SSPE2) minus the Pre-Project Stationary Source Potential to Emit (SSPE1), i.e. SSIPE = SSPE2 – SSPE1. The values for SSPE2 and SSPE1 are calculated according to Rule 2201, Sections 4.9 and 4.10, respectively. The SSIPE is compared to the SSIPE Public Notice thresholds in the following table:

Stationary Source Increase in Permitted Emissions [SSIPE] – Public Notice					
Pollutant	SSPE2 (lb/year)	SSPE1 (lb/year)	SSIPE (lb/year)	SSIPE Public Notice Threshold	Public Notice Required?
NO_x	>20,000 lb/year	>20,000 lb/year	0	20,000 lb/year	No
SO_x	>54,750 lb/year	>54,750 lb/year	0	20,000 lb/year	No
PM_{10}	>29,200 lb/year	>29,200 lb/year	0	20,000 lb/year	No
CO	>200,000 lb/year	>200,000 lb/year	0	20,000 lb/year	No
VOC	>20,000 lb/year	>20,000 lb/year	1115	20,000 lb/year	No

2. Public Notice Action

As discussed above, public noticing is required for this project for VOC emissions as the project is a Federal Major Modification. Therefore, public notice documents will be submitted to the California Air Resources Board (CARB) and a public notice will be published in a local newspaper of general circulation prior to the issuance of the ATC for this equipment.

D. Daily Emission Limits (DELs)

Daily Emissions Limitations (DELs) and other enforceable conditions are required by Section 3.15 to restrict a unit's maximum daily emissions, to a level at or below the emissions associated with the maximum design capacity. Per Sections 3.15.1 and 3.15.2, the DEL must be contained in the latest ATC and contained in or enforced by the latest PTO and enforceable, in a practicable manner, on a daily basis. DELs are also required to enforce the applicability of BACT.

For this liquid transfer operation, the DELs are stated in the form of fugitive component counts and maximum daily disconnects.

Proposed Rule 2201 (DEL) Conditions:

During hose disconnects the maximum liquid spillage for liquids shall not exceed 10 milliliters/disconnect based on an average from 3 consecutive disconnects. [District Rules 2201 and 4623]

Emissions from fugitive emissions components and excess liquid drainage from railcar gas/liquid transfer facility shall not exceed 3.1 lb/day. [District Rule 2201] Y

Total number of disconnects shall not exceed 20 per day. [District Rule 2201] Y

E. Compliance Assurance

1. Source Testing

Pursuant to District Policy APR 1705, source testing is not required to demonstrate compliance with Rule 2201.

2. Monitoring

No monitoring is required to demonstrate compliance with Rule 2201.

3. Recordkeeping

Recordkeeping is required to demonstrate compliance with the offset, public notification and daily emission limit requirements of Rule 2201. The following condition(s) will appear on the permit to operate:

Permittee shall maintain accurate component count and emissions calculated using CAPCOA Screening Range Emissions Factors for Marketing Terminals, from California Implementation Guidelines for Estimating Emissions of Fugitive Hydrocarbon Leaks at Marketing Terminals, Table IV-2b, February 1999.[District Rule 2201] Y

Daily records of the number of liquid transfer facility disconnects shall be maintained, retained on the premises for a period of at least five years and made available for District inspection upon request. [District Rules 1070 and 2201]

The permittee shall keep accurate daily records of TVP, transfer temperature, and types of liquids transferred for a period of five years, and shall make such records available for District inspection upon request. [District Rules 2520 and 4624] Y

4. Reporting

No reporting is required to demonstrate compliance with Rule 2201.

G. Compliance Certification

Section 4.15.2 of this Rule requires the owner of a new Major Source or a source undergoing a Federal Major Modification to demonstrate to the satisfaction of the District that all other Major Sources owned by such person and operating in California are in compliance or are on a schedule for compliance with all applicable emission limitations and standards. As discussed in Sections VIII-Rule 2201-C.1.a and VIII-Rule 2201-C.1.b, this facility is a new major source and this project does constitute a Federal Major Modification, therefore this requirement is applicable. Included in **Attachment VI** is Kern's Corporation's compliance certification.

H. Alternate Siting Analysis

The project will occur at an existing facility. The applicant proposes to authorize a liquid transfer facility.

Since the project will authorize a liquid transfer facility to be used at the same location, the existing site will result in the least possible impact from the project. Alternative sites would involve the relocation and/or construction of various support structures on a much greater scale, and would therefore result in a much greater impact.

Rule 2520 Federally Mandated Operating Permits

This facility is subject to this Rule, and has received their Title V Operating Permit. Section 3.29 defines a significant permit modification as a "permit amendment that does not qualify as a minor permit modification or administrative amendment."

The project is Federal Major Modification and therefore is also a Title V Significant Modification. As discussed above, the facility has applied for a Certificate of Conformity (COC); therefore, the facility must apply to modify their Title V permit with an administrative amendment, prior to operating with the proposed modifications. Continued compliance with this rule is expected. The Title V Compliance Certification form is included in **Attachment VI**.

Rule 4102 Nuisance

Section 4.0 prohibits discharge of air contaminants which could cause injury, detriment, nuisance or annoyance to the public. Public nuisance conditions are not expected as a result of these operations, provided the equipment is well maintained. Therefore, compliance with this rule is expected.

California Health & Safety Code 41700 (Health Risk Assessment)

District Policy APR 1905 – Risk Management Policy for Permitting New and Modified Sources specifies that for an increase in emissions associated with a proposed new source or modification, the District perform an analysis to determine the possible impact to the nearest resident or worksite.

A HRA is not required for a project with a total facility prioritization score of less than one. According to the Technical Services Memo for this project (**Attachment VII**), the total facility prioritization score including this project was greater than one. Therefore, a health risk assessment was required to determine the short-term acute and long-term chronic exposure from this project.

The cancer risk for this project is shown below:

HRA Summary		
Unit	Cancer Risk	T-BACT Required
S-37-147	0.55	No

The project is approvable without TBACT.

Rule 4621 Gasoline Transfer into Stationary Storage Containers, Delivery Vessels, and Bulk Plants

Organic liquid transfer operation S-37-8 currently meets the requirements of the rule and continued compliance is expected.

Rule 4624 – Organic Liquid Loading

S-37-7

Permit unit S-37-8 currently meets the requirements of the rule.

S-37-147

Permit unit S-37-147 is a Class 1 liquid transfer operation. The requirements for Class 1 transfer facilities are set forth in Section 5.1 as follows:

5.1 For a Class 1 organic liquid transfer facility, the emission of VOC from the transfer operation shall not exceed 0.08 pounds per 1,000 gallons of organic liquid transferred and use one of the following systems:

5.1.1 An organic liquid loading operation shall be bottom loaded.

5.1.2 The VOC from the transfer operation shall be routed to:

5.1.2.1 A vapor collection and control system;

5.1.2.2 A fixed roof container that meets the control requirements specified in Rule 4623 (Storage of Organic Liquids);

5.1.2.3 A floating roof container that meets the control requirements specified in Rule 4623 (Storage of Organic Liquids); or

5.1.2.4 A pressure vessel equipped with an APCO-approved vapor recovery system that meets the control requirements specified in Rule 4623 (Storage of Organic Liquids); or

5.1.2.5 A closed VOC emission control system.

The following conditions will be included on the ATC:

5. All liquids and gases from the transfer operation shall be routed to one of the following systems: a vapor collection and control system; a fixed roof container that meets the control requirements specified in Rule 4623 (Storage of Organic Liquids); a floating roof container that meets the control requirements specified in Rule 4623 (Storage of Organic Liquids); or a pressure vessel equipped with an APCO-approved vapor recovery system that meets the control requirements specified in Rule 4623 (Storage of Organic Liquids); or a closed VOC emission control system. [District Rules 4623 and 4624] Y

11. For this Class 1 organic liquid transfer operation, the emission of VOC from the transfer operation shall not exceed 0.08 pounds per 1,000 gallons of organic liquid transferred. [District Rule 4624]

Sections 5.3 through 5.5

5.3 A transfer operation utilizing a closed VOC emission control system or utilizing a container that meets the control requirements of Rule 4623 (Storage of Organic Liquids) to meet the emission control requirements of this rule shall demonstrate compliance with Sections 5.1 and 5.2 by complying with the leak inspection requirements of Section 5.9.

5.4 The vapor collection and control system shall operate such that the pressure in the delivery tank being loaded does not exceed 18 inches water column pressure and six (6) inches water column vacuum. This section shall not apply to the transfer of liquefied petroleum gas.

5.5 All delivery tanks which previously contained organic liquids with a TVP of 1.5 psia or greater at the storage container's maximum organic liquid storage temperature shall be filled only at transfer facilities satisfying Sections 5.1, 5.2, or 5.4, as applicable.

5.6 The transfer rack and vapor collection equipment shall be designed, installed, maintained and operated such that there are no leaks <u>and no excess organic liquid drainage at disconnections.</u>

The following condition will be included on the ATC:

4. Transfer rack shall be maintained and operated in accordance with the manufacturer's specifications, and operated such that there are no leaks or excess organic liquid drainage at disconnections as defined herein. [District Rule 4624] Y

5.7 The construction of any new top loading facility or the reconstruction, as defined in 40 CFR 60.15, or the expansion of any existing top loading facility with top loading equipment shall not be allowed.

5.8 Notwithstanding any other provision of this rule, organic liquid transfer facilities exclusively handling liquefied petroleum gas need not comply with the bottom loading provisions of Sections 5.1, 5.2 or 5.7, provided the operator complies with the emission limit of Section 5.1, 5.2 and the provisions of Section 5.6 – <u>not applicable</u>

<u>5.9 Leak Inspection Requirements and (Leak Definition, 3.17)</u>

3.17 Leak: the dripping of VOC-containing liquid at a rate of more than three (3) drops per minute; or

3.17.1 For <u>organic liquids</u> other than gasoline, the detection of any gaseous or vapor emissions with a concentration of <u>VOC greater than 1,000 ppmv above a background</u> as methane when measured in accordance with the test method in Section 6.3.7 shall constitute a leak

3.17.2 For <u>gasoline</u>, a concentration of <u>VOC greater than 10,000 ppmv</u>, as methane, above background when measured in accordance with the test method in Section 6.3.7 shall constitute a leak.

3.17.3 Any liquid or gas coming from a component undergoing repair or replacement, or during sampling of process fluid from equipment into a container is not considered a leak provided such activities are accomplished as expeditiously as possible and with minimal spillage of material and VOC emissions to the atmosphere.

The following condition will be included on the ATC:

12. A leak is defined as the dripping of VOC-containing liquid at a rate of more than three (3) drops per minute; or for organic liquids other than gasoline, the detection of any gaseous or vapor emissions with a concentration of VOC greater than 1,000 ppmv above a background as methane when measured in accordance with the test method in Section 6.3.8. Any liquid or gas coming from a component undergoing repair or replacement, or during sampling of process fluid from equipment into a container is not considered a leak provided such activities are accomplished as expeditiously as possible and with minimal spillage of material and VOC emissions to the atmosphere. [District Rule 4624] Y

5.9.1 The operator of an organic liquid transfer facility shall inspect the vapor collection system, the vapor disposal system, and each transfer rack handling organic liquids for leaks during transfer at least once every calendar quarter using the test method prescribed in Section 6.3.8.

5.9.2 A floating roof container that meets the applicable control requirements of Section 5.0 of Rule 4623 (Storage of Organic Liquids) shall be considered not leaking for the purposes of this section.

5.9.3. All equipment that are found leaking shall be repaired or replaced within 72 hours. If the leaking component cannot be repaired or replaced within 72 hours, the component shall be taken out of service until such time the component is repaired or replaced. The repaired or replacement equipment shall be reinspected the first time the equipment is in operation after the repair or replacement.

5.9.4 An operator may apply for a written approval from the APCO to change the inspection frequency from quarterly to annually provided no leaks were found during the inspections required under provisions of Sections 5.9.1 and 5.9.2 during five consecutive quarterly inspections. Upon identification of any leak during an annual inspection the frequency would revert back to quarterly and the operator shall contact the APCO in writing within 14 days.

The following conditions will be included on the ATC:

8. During hose disconnects the maximum liquid spillage for liquids shall not exceed 10 milliliters/disconnect based on an average from 3 consecutive disconnects. [District Rule 2201 and 4624] N

13. Permittee shall inspect the loading rack for leaks during transfer at least once every calendar quarter using the test method prescribed in Section 6.3.8 of Rule 4624 or alternative method approved in writing by the APCO and EPA. [District Rule 4624] Y

14. An operator may apply for a written approval from the APCO to change the inspection frequency from quarterly to annually provided no leaks were found during the inspections required under provisions of Sections 5.9.1 and 5.9.2 of Rule 4624 during five consecutive quarterly inspections. Upon identification of any leak during an annual inspection the frequency shall revert back to quarterly and the operator shall contact the APCO in writing within 14 days. [District Rule 4624] Y

15. Corrective steps shall be taken at any time the operator observes a leak or excess drainage at disconnect. All equipment found leaking shall be repaired or replaced within 72 hours. If the leaking component cannot be repaired or replaced within 72 hours, the component shall be taken out of service until such time the component is repaired or replaced. The repaired or replaced equipment shall be reinspected the first time the equipment is in operation after the repair or replacement. [District Rule 4624] Y

6.1 Recordkeeping (non-exemption requirements)

6.1.3 An operator subject to any part of Section 5.0 shall keep records of daily liquid throughput and the results of any required leak inspections.

6.1.4 Records required under Sections 6.1.1, 6.1.2, 6.1.3 shall be retained for a minimum of five years and shall be made readily available to the APCO, ARB, or EPA during normal business hours and submitted upon request to the APCO, ARB, or EPA.

The following conditions will be included on the ATC:

16. All inspections shall be documented with an inspection log. Inspection records shall include, at a minimum, 1) date of inspection, 2) location and description of any missing, loose, leaking, or damaged equipment and any malfunction requiring repair, 3) corrective steps taken to repair or replace the equipment, 4) test method and results for leak and drainage inspections, 5) location and description of any equipment to be inspected upon commencing operation after repair or replacement and 6) inspector name and signature. [District Rule 4624] Y

17. Permittee shall keep records of daily unloading rack throughput and the results of any required leak inspections. [District Rule 4624] Y

18. Permittee shall keep records of daily number of truck unloading disconnects. [District Rules 1070 and 2201] Y

19. Records shall be retained for a minimum of five years and shall be made readily available to the APCO, ARB, or EPA during normal business hours and submitted upon request to the APCO, ARB, or EPA. [District Rules 1070 and 4624] Y

6.2 Compliance Testing

6.2.1 By July 20, 2009, the operator of any Class 1 or Class 2 organic liquid transfer facility shall perform an initial source test of the VOC emission control system in accordance with the method prescribed in Section 6.3.2 to determine compliance with Section 5.1 and 5.2, as applicable.

6.2.1.1 Facilities in existence prior to December 20, 2007 that have performed the test specified in Section 6.3.2 within the 60 month period preceding December 20, 2007 need not perform an initial source test.

6.2.1.2 The source testing requirements of Section 6.2.1 <u>shall not apply to any Class 1 or Class 2 organic liquid transfer facility equipped with a closed VOC control system</u>.

6.2.1.3 The source testing requirements of Section 6.2.1 <u>shall not apply to any Class 1 or Class 2 organic liquid transfer facility controlling VOC by routing vapors to:</u>

6.2.1.3.1 <u>A fixed roof container</u> that meets the control requirements specified in Rule 4623 (Storage of Organic Liquids); or

6.2.1.3.2 <u>A floating roof container</u> that meets the control requirements specified in Rule 4623 (Storage of Organic Liquids); or

6.2.1.3.3 A pressure vessel equipped with an APCO-approved vapor recovery system that meets the control requirements specified in Rule 4623 (Storage of Organic Liquids).

Compliance testing is not required by inclusion the following condition on the ATC:

5. All liquids and gases from the transfer operation shall be routed to one of the following systems: a vapor collection and control system; a fixed roof container that meets the control requirements specified in Rule 4623 (Storage of Organic Liquids); a floating roof container that meets the control requirements specified in Rule 4623 (Storage of Organic Liquids); or a pressure vessel equipped with an APCO-approved vapor recovery system that meets the control requirements specified in Rule 4623 (Storage of Organic Liquids); or a closed VOC emission control system. [District Rules 4623 and 4624] Y

Compliance with this rule is expected.

California Health & Safety Code 42301.6 (School Notice)

The District has verified that this site is not located within 1,000 feet of a school. Therefore, pursuant to California Health and Safety Code 42301.6, a school notice is not required.

California Environmental Quality Act (CEQA)

The California Environmental Quality Act (CEQA) requires each public agency to adopt objectives, criteria, and specific procedures consistent with CEQA Statutes and the CEQA Guidelines for administering its responsibilities under CEQA, including the orderly evaluation of projects and preparation of environmental documents. The San Joaquin Valley Unified Air Pollution Control District (District) adopted its *Environmental Review Guidelines* (ERG) in 2001. The basic purposes of CEQA are to:

- Inform governmental decision-makers and the public about the potential, significant environmental effects of proposed activities;
- Identify the ways that environmental damage can be avoided or significantly reduced;
- Prevent significant, avoidable damage to the environment by requiring changes in projects through the use of alternatives or mitigation measures when the governmental agency finds the changes to be feasible; and
- Disclose to the public the reasons why a governmental agency approved the project in the manner the agency chose if significant environmental effects are involved.

Greenhouse Gas (GHG) Significance Determination

It is determined that no other agency has or will prepare an environmental review document for the project. Thus the District is the Lead Agency for this project. The District's engineering evaluation (this document) demonstrates that the project would not result in an increase in project specific greenhouse gas emissions. The District therefore concludes that the project would have a less than cumulatively significant impact on global climate change.

District CEQA Findings

The District is the Lead Agency for this project because there is no other agency with broader statutory authority over this project. The District performed an Engineering

Evaluation (this document) for the proposed project and determined that the activity will occur at an existing facility and the project involves negligible expansion of the existing use. Furthermore, the District determined that the activity will not have a significant effect on the environment. The District finds that the activity is categorically exempt from the provisions of CEQA pursuant to CEQA Guideline § 15031 (Existing Facilities), and finds that the project is exempt per the general rule that CEQA applies only to projects which have the potential for causing a significant effect on the environment (CEQA Guidelines §15061(b)(3)).

IX. Recommendation

Compliance with all applicable rules and regulations is expected. Pending a successful NSR Public Noticing period, issue Authorities to Construct S-37-8-29 and '-147-0 subject to the permit conditions on the attached draft Authority to Construct in **Attachment VIII**.

X. Billing Information

Annual Permit Fees			
Permit Number	Fee Schedule	Fee Description	Annual Fee
S-37-8-29	3020-01-F	415 hp	$607.00
S-37-147-0	3020-01-B	30 hp	$117.00

Attachments

I: Current PTO S-37-8-26
II: Process Diagrams
III: Emissions Profiles
IV: BACT Guideline
V: BACT Analysis
VI: Compliance Certification
VII: HRA
VIII: Draft ATCs

Attachment I
PTO S-37-8-26

San Joaquin Valley
Air Pollution Control District

PERMIT UNIT: S-37-8-26 **EXPIRATION DATE:** 08/31/2007

SECTION: 25 **TOWNSHIP:** 30S **RANGE:** 28E

EQUIPMENT DESCRIPTION:
ORGANIC LIQUID LOADING AREAS AND REFINERY VAPOR RECOVERY SYSTEM INCLUDING COMPRESSOR(S), LOADING RACKS WITH UP TO 22 PRODUCT LINES AND UP TO 18 VAPOR RETURN LINES

PERMIT UNIT REQUIREMENTS

1. For the transfer of gasoline only, transfer to any stationary storage container with 250 gallon capacity or more shall not be allowed unless the container is equipped with a permanent submerged fill pipe and an ARB certified Phase I vapor recovery system, which is maintained and operated according to the manufacturers specifications, or a vapor recovery system with 95% control approved by the District. [District Rule 4621, 5.1.1] Federally Enforceable Through Title V Permit
2. All delivery tanks which previously contained organic liquids, including gasoline, with a TVP greater than 1.5 psia at loading conditions shall be filled only at Class 1 or Class 2 loading facilities that meet the vapor collection and control requirements of District Rule 4624 or listed herein. [District Rule 4624, 5.3] Federally Enforceable Through Title V Permit
3. Construction, reconstruction (as defined in District Rule 4001, amended January 19, 1995), or expansion of any top loading facility shall not be allowed. [District Rule 4624, 5.5] Federally Enforceable Through Title V Permit
4. The organic liquid and gasoline loading operation shall be equipped with bottom loading equipment with a vapor collection and control system meeting the requirements listed in this permit. [District Rules 4621, 5.2 and 4624, 5.3] Federally Enforceable Through Title V Permit
5. Transfer rack and vapor collection and control equipment shall be designed, installed, maintained in accordance with the manufacturers specifications, and operated such that there are no leaks or excess organic liquid drainage at disconnections as defined herein. [District Rules 4621, 5.1 and 4624, 5.6] Federally Enforceable Through Title V Permit
6. For gasoline delivery vessels, a leak shall be defined as the dripping of VOC-containing liquid at a rate of more than three drops per minute or a reading greater than 100 percent of the Lower Explosive Limit (21,000 ppmv as propane) in accordance with EPA Method 21. [District Rule 4621, 3.19]
7. For components used in the gasoline loading operation, a leak shall be defined as the dripping of VOC-containing liquid at a rate of more than three drops per minute or the detection of organic compounds, in excess of 10,000 ppm as methane measured at a distance of one centimeter from the potential source in accordance with EPA Method 21. Excess liquid drainage shall be defined as exceeding 10 mls per average of 3 consecutive disconnects. [District Rules 4621, 3.19 and 4624, 3.17.2]
8. For delivery vessels and components used in the organic liquid loading operation, a leak shall be defined as the detection of organic compounds, in excess of 1,000 ppm as methane measured at a distance of one centimeter from the potential source in accordance with EPA Method 21. [District Rule 4624, 3.17.1]
9. Equipment under vapor control shall not vent to atmosphere. [District Rules 4621,5.2 and 4624, 5.1.] Federally Enforceable Through Title V Permit

PERMIT UNIT REQUIREMENTS CONTINUE ON NEXT PAGE

10. VOC emission rate from diesel loading rack shall not exceed any of the following: Fugitive emissions: 0.12 lb/hr and vapor recovery system: 0.09 lb/hr. [District Rule 2201] Federally Enforceable Through Title V Permit

11. VOC emission rate from fugitive components associated with the refinery vapor control system shall not exceed 6.9 lb/day. [District Rule 2201] Federally Enforceable Through Title V Permit

12. The vapor collection and control system shall operate such that VOC emissions do not exceed 0.08 lb/1000 gallons of organic liquid loaded with greatest vapor pressure loaded; maintains at least 95% capture and control efficiency of VOC and which operates so the delivery tank does not exceed 18 inches water column pressure nor 6 inches water column vacuum. [District Rule 4624, 5.1] Federally Enforceable Through Title V Permit

13. No gasoline delivery vessel shall be used or operated unless it is vapor tight. No gasoline delivery vessel shall be operated or loaded unless valid State of California decals are displayed on the cargo tank, attesting to the vapor integrity of the tank as verified by annual performance of CARB required Certification and Test Procedures for Vapor Recovery Systems for Cargo Tanks (Executive Order G-70-10-A) or EPA Method 27 for testing delivery vessels owned or operated by this facility. [District Rule 4621, 5.2.1 & 5.2.2, Health & Safety Code, section 41962, and CCR, Title 17 section 94004] Federally Enforceable Through Title V Permit

14. Measurements of leak concentrations for organic liquid delivery vessels, including gasoline, shall be conducted according to the ARB Test Procedure for Determination of Leaks, TP-204.3, or EPA Method 21. [District Rules 4621, 6.2 and 4624, 6.2] Federally Enforceable Through Title V Permit

15. During loading of a delivery vessel, the truck-mounted vapor return line shall be connected to the vapor recovery system listed on this permit. [District Rules 2201 and 4621, 5.7] Federally Enforceable Through Title V Permit

16. A delivery vessel loading gasoline shall discontinue if its pressure relief valve opens. Corrective action shall be taken should this condition occur. [District Rule 2520, 9.1 and 4621] Federally Enforceable Through Title V Permit

17. Switch loading shall not be conducted unless such transfer is made using the vapor recovery system. [District Rules 2201 and 4621] Federally Enforceable Through Title V Permit

18. Operators shall conduct all performance tests required by the facility installation and operations manual as per the frequency outlined therein or as designated by the APCO. [District Rules 4621, 6.2.1 and 4624, 6.2] Federally Enforceable Through Title V Permit

19. The vapor recovery system shall be performance tested within 60 days of completion of installation or modification. The District shall be notified by the permittee 7 days prior to each test. The test results shall be submitted to the District no later than 30 days after each test. [District Rule s 1081 and 4621, 6.2.2] Federally Enforceable Through Title V Permit

20. VOC emissions from the vapor collection and control system shall be determined annually using 40CFR$^{\perp}$ 60.503. "Test Methods and Procedures" and EPA Reference Methods 2A, 2B, 25A and 25B and ARB Method 432, or ARB Method TP 203-1. [District Rule 4624, 6.2.2] Federally Enforceable Through Title V Permit

21. Analysis of halogenated exempt VOC compounds shall be by ARB Method 432. [District Rule 4624, 6.2.2] Federally Enforceable Through Title V Permit

22. The permittee shall conduct and record maintenance inspections of the loading and vapor recovery equipment using sight, sound, and smell to detect leaks five days per week. [District Rules 4621, 5.5 and 4624, 5.9] Federally Enforceable Through Title V Permit

23. The operator shall perform and record the results of monthly leak and drainage inspections of the loading and vapor collection equipment at each loading arm. During the loading of gasoline or organic liquids, leak detection shall be conducted using EPA Method 21 measuring at a distance of one centimeter from the potential source. When not in current operation, excess drainage inspections shall be conducted before 10:00 am at the disconnect of each loading arm by collecting all drainage at disconnect in a container and determining the volume within one (1) minute of collection [District Rules 2520, 9.3.2, 40 CFR 60.502(j) and 4624, 5.9] Federally Enforceable Through Title V Permit

PERMIT UNIT REQUIREMENTS CONTINUE ON NEXT PAGE

24. The leak detection instrument shall be calibrated each day of its use, prior to use, by the procedures specified in Method 21 using the following calibration gases: A) Zero air (less than 10 ppm of hydrocarbon in air); and B) Mixture of methane or n-hexane and air at a concentration of about, but less than, 10,000 ppm methane or n-hexane. [District Rules 2520, 9.3.2 and 4624, 5.9] Federally Enforceable Through Title V Permit

25. Corrective steps shall be taken at any time the operator observes a leak or excess drainage at disconnect. All equipment found leaking shall be repaired or replaced within 72 hours. If the leaking component cannot be repaired or replaced within 72 hours, the component shall be taken out of service until such time the component is repaired or replaced. The repaired or replacement equipment shall be reinspected the first time the equipment is in operation after the repair or replacement. [District Rule 4624, 5.9] Federally Enforceable Through Title V Permit

26. All inspections shall be documented within the inspection log. Inspection records shall include, at a minimum, 1) date of inspection, 2) location and description of any missing, loose, leaking, or damaged equipment and any malfunction requiring repair, 3) corrective steps taken to repair or replace the equipment, 4) test method and results for leak and drainage inspections, 5) location and description of any of equipment which shall be inspected upon commencing operation after repair or replacement and 6) inspector name and signature. [District Rules 4621, 5.5 and 4624, 5.4] Federally Enforceable Through Title V Permit

27. Records of daily throughput of each loading rack shall be maintained and made available to the APCO, ARB, or EPA during normal business hours. [District Rules 2201, 4621, and 4624, 6.1.3] Federally Enforceable Through Title V Permit

28. The permittee shall maintain accurate records of exempt and non-exempt components and their associated function in the Operator Management Plan (OMP) as required in section 6.1 of Rule 4455. Permit holder shall update the Operator Management Plan when new components are installed. By January 30 of each year, an annual report indicating any changes to an existing Operator Management Plan shall be submitted to the APCO. [District Rule 4455, 6.1] Federally Enforceable Through Title V Permit

29. Permit holder shall maintain accurate component count and resultant emissions according to CAPCOA's "California Implementation Guidelines for Estimating Mass Emissions of Fugitive Hydrocarbon Leaks at Petroleum Facilities," Table IV-3a (Feb 1999), CAPCOA-Revised 1995 EPA Correlation Equations and Factors for Refineries and Marketing Terminals. Components shall be screened and leak rate shall be measured at least once each quarter. If compliance with the daily emission limit is shown during each of five (5) consecutive quarterly inspections, the inspection frequency may be changed from quarterly to annual. If any annual inspection shows non-compliance with the daily emission limit, then quarterly inspections shall be resumed. [District Rules 2201, District Rule 4455] Federally Enforceable Through Title V Permit

Attachment II
Process Diagrams

Figure 2. Unloading Configuration
Kern Oil & Refining Co.

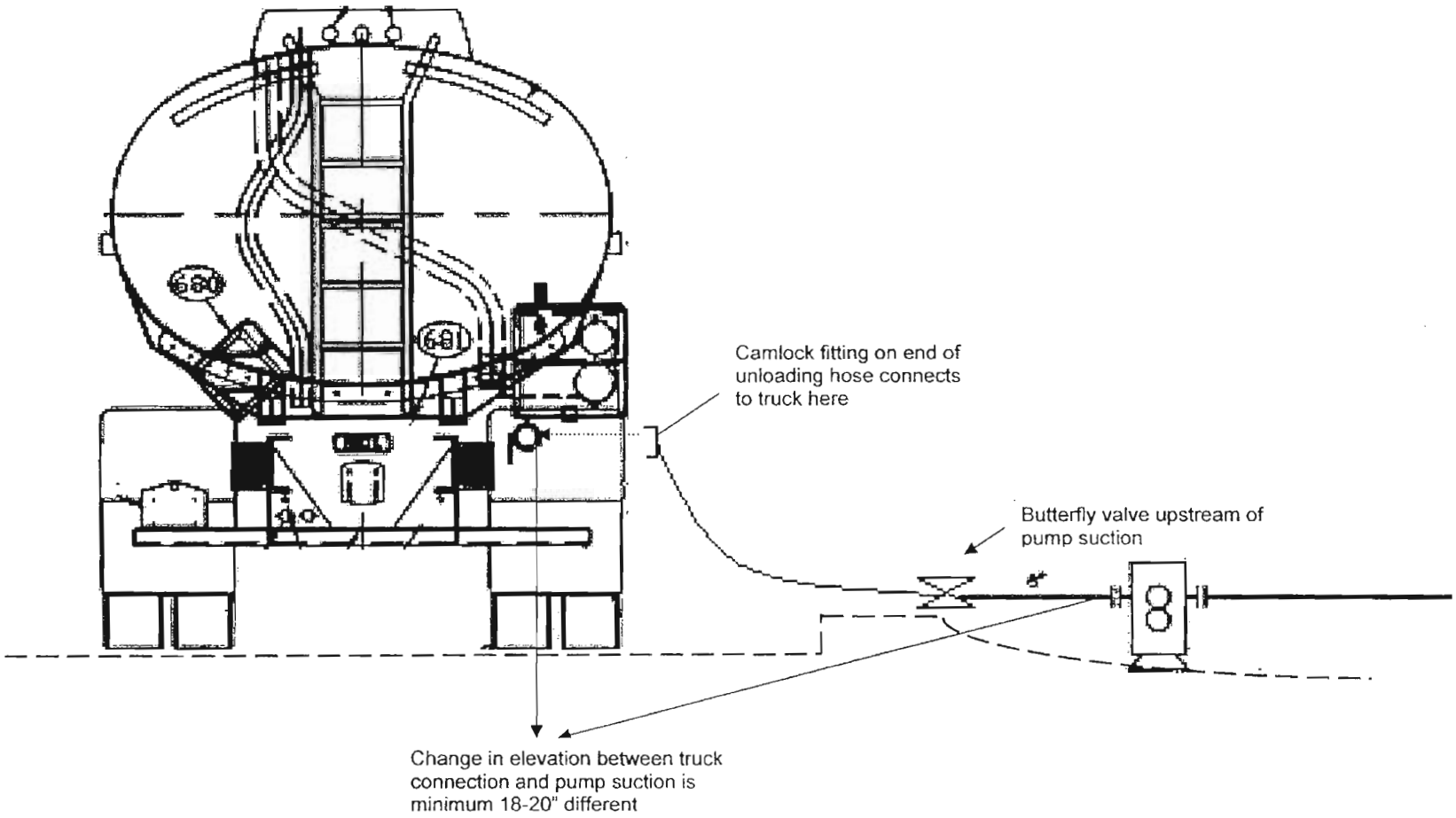

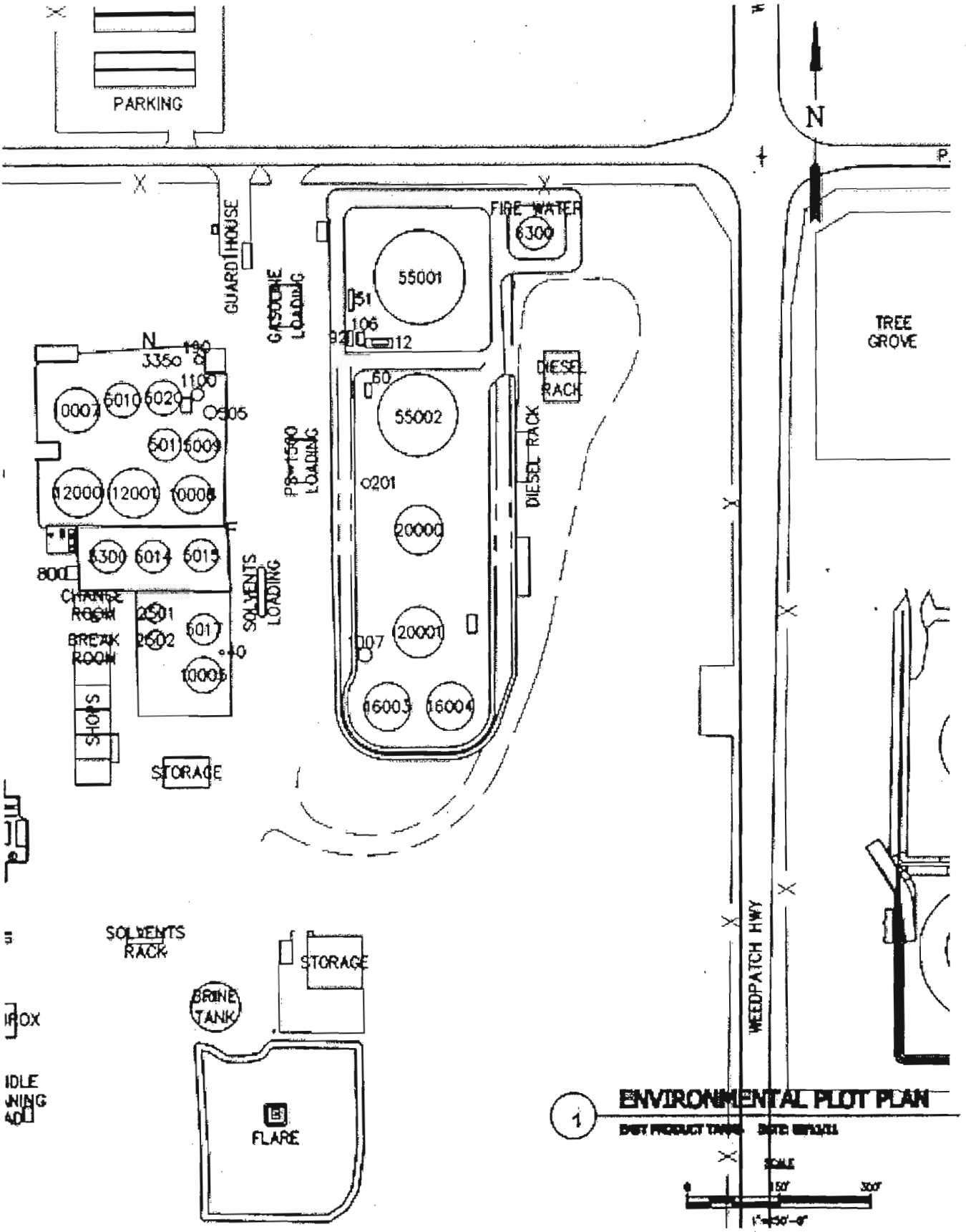
PARKING
N
GUARDHOUSE
GASOLINE LOADING
FIRE WATER
6300
55001
51
106
12
TREE GROVE
DIESEL RACK
55002
DIESEL RACK
PB-1590 LOADING
o201
20000
20001
16003
16004
SOLVENTS LOADING
CHANGE ROOM
BREAK ROOM
SHOPS
STORAGE
SOLVENTS RACK
STORAGE
BRINE TANK
FLARE
WEEDPATCH HWY
ENVIRONMENTAL PLOT PLAN
SCALE

Rack S - Nearest Receptors

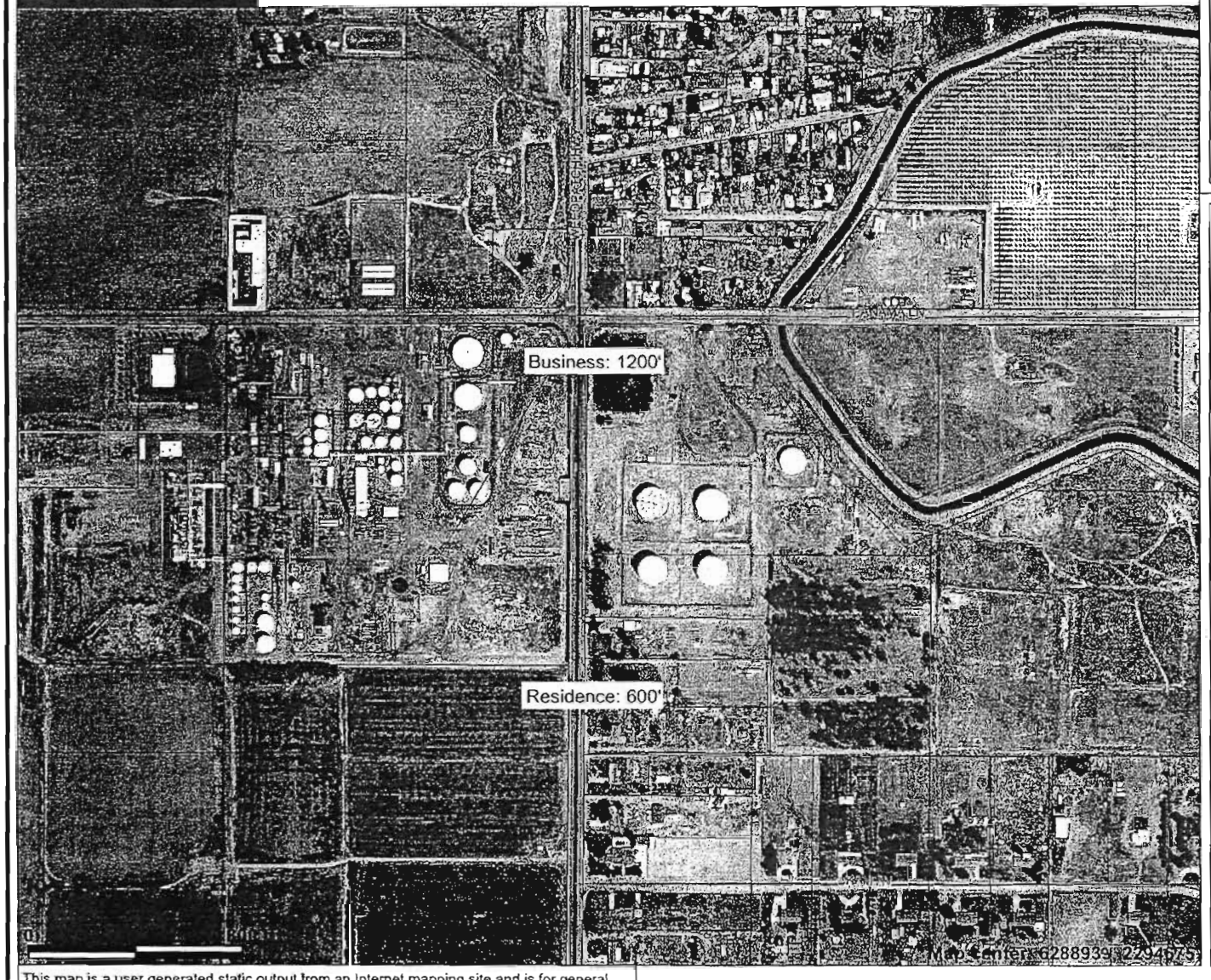

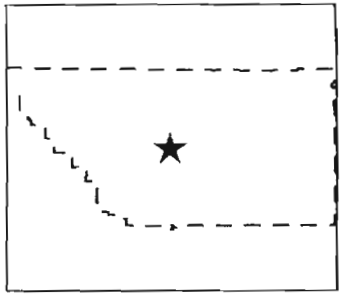

Legend

Roads

- Arterial
- Collector
- Highway
- Local
- Ramp
- Unpaved

- County of Kern
- Assessment Parcels

Scale: 1:6,800

This map is a user generated static output from an Internet mapping site and is for general reference only. Data layers that appear on this map may or may not be accurate, current, or otherwise reliable. THIS MAP IS NOT TO BE USED FOR NAVIGATION.

Attachment III
Emissions Profiles

Application Emissions

Permit #: S-37-8-29	**Last Updated**
Facility: KERN OIL & REFINING COMPANY	06/17/2011 EDGEHILR

Equipment Pre-Baselined: NO

	NOX	SOX	PM10	CO	VOC
Potential to Emit (lb/Yr):	0.0	0.0	0.0	0.0	4358.0
Daily Emis. Limit (lb/Day)	0.0	0.0	0.0	0.0	11.9
Quarterly Net Emissions Change (lb/Qtr)					
Q1:	0.0	0.0	0.0	0.0	0.0
Q2:	0.0	0.0	0.0	0.0	0.0
Q3:	0.0	0.0	0.0	0.0	0.0
Q4:	0.0	0.0	0.0	0.0	0.0
Check if offsets are triggered but exemption applies	N	N	N	N	N
Offset Ratio					
Quarterly Offset Amounts (lb/Qtr)					
Q1:					
Q2:					
Q3:					
Q4:					

Application Emissions

Permit #: S-37-147-0	**Last Updated**
Facility: KERN OIL & REFINING COMPANY	06/17/2011 EDGEHILR

Equipment Pre-Baselined: NO

	NOX	SOX	PM10	CO	VOC
Potential to Emit (lb/Yr):	0.0	0.0	0.0	0.0	1115.0
Daily Emis. Limit (lb/Day)	0.0	0.0	0.0	0.0	3.1
Quarterly Net Emissions Change (lb/Qtr)					
Q1:	0.0	0.0	0.0	0.0	278.0
Q2:	0.0	0.0	0.0	0.0	279.0
Q3:	0.0	0.0	0.0	0.0	279.0
Q4:	0.0	0.0	0.0	0.0	279.0
Check if offsets are triggered but exemption applies	N	N	N	N	N
Offset Ratio					1.5
Quarterly Offset Amounts (lb/Qtr)					
Q1:					418.0
Q2:					418.0
Q3:					418.0
Q4:					418.0

Attachment IV
BACT Guideline

San Joaquin Valley
Unified Air Pollution Control District

Best Available Control Technology (BACT) Guideline 7.1.14*

Last Update: 9/21/2006

Light Crude Oil Unloading Rack

Pollutant	Achieved in Practice or contained in the SIP	Technologically Feasible	Alternate Basic Equipment
VOC	use of dry-break couplers or equivalent on unloading lines with an average disconnect loss of no greater than 10 ml liquid per disconnect, and fugitive components subject to Rules 4409 or 4455 as applicable	use of dry-break couplers or equivalent on unloading lines with an average disconnect loss of no greater than 8 ml liquid per disconnect, and fugitive components subject to Rules 4409 or 4455 as applicable	

BACT is the most stringent control technique for the emissions unit and class of source. Control techniques that are not achieved in practice or contained in s a state implementation plan must be cost effective as well as feasible. Economic analysis to demonstrate cost effectiveness is requried for all determinations that are not achieved in practice or contained in an EPA approved State Implementation Plan.

***This is a Summary Page for this Class of Source - Permit Specific BACT Determinations on Next Page(s)**

Attachment V
BACT Analysis

BACT is triggered for VOC. BACT Clearinghouse Guideline 7.1.14 is applicable.

Step 1 – Identify All Possible Control Technologies

Use of dry-break couplers or equivalent on unloading lines with an average disconnect loss of no greater than 10 ml liquid per disconnect

Step 2 – Eliminate Technologically Infeasible Options

There are no technologically infeasible options.

While not technologically infeasible, the use of dry-break couplers poses logistical infeasibilities in that the dry-break couplers must be installed on the stationary unloading hoses at Kern's unloading rack, as well as on the delivery trucks bringing loads of organic liquid into Kern's facility. Kern does not own the fleet of delivery trucks and therefore is not in control of the specific unloading fittings such trucks are equipped with. These fleets deliver to multiple customer locations and must be equipped with universal equipment to unload at any or all sites rather than being equipped with a technology specific to just one facility.

Step 3 – Rank Remaining Control Technologies by Control Effectiveness

Dry-break couplers or equivalent with an average disconnect loss of no greater than 10 ml liquid per disconnect

Step 4 – Cost Effectiveness Analysis

Kern is proposing to use camlock fittings to connect the unloading hose to the delivery vehicle. The configuration of the unloading facility is such that the unloading hose will drain completely, given the downward slope of the hose and the positioning of the unloading pump at a slightly lower elevation than the camlock connection on the delivery truck. Therefore, even after the shutoff valve on the truck has been closed, the hose will continue to drain to the pump suction. Once the hose has been evacuated completely, the pump is shut down and valve closed. This combination of camlock fittings, rack configuration and unloading procedure achieves equivalent results to the use of dry-break couplers for minimal leakage upon disconnect.

As no technologically infeasible controls are identified, a cost-effectiveness analysis is not required.

Step 5 – Select BACT

The use of camlock fittings with an average disconnect loss of no greater than 10 ml liquid per disconnect as described in Step 4 is considered BACT for the control of VOC.

Attachment VI
Compliance Certification

San Joaquin Valley
Unified Air Pollution Control District

RECEIVED
MAY -9 2011
SJVAPCD
Southern Region

TITLE V MODIFICATION - COMPLIANCE CERTIFICATION FORM

I. TYPE OF PERMIT ACTION (Check appropriate box)

[ ] SIGNIFICANT PERMIT MODIFICATION
[X] MINOR PERMIT MODIFICATION
[ ] ADMINISTRATIVE AMENDMENT

COMPANY NAME: Kern Oil & Refining Company	FACILITY ID: S- 37
1. Type of Organization:[X] Corporation [ ] Sole Ownership [ ] Government [ ] Partnership [ ] Utility	
2. Owner's Name: Kern Oil & Refining Company	
3. Agent to the Owner: n/a	

II. COMPLIANCE CERTIFICATION (Read each statement carefully and initial all circles for confirmation):

BC Based on information and belief formed after reasonable inquiry, the equipment identified in this application will continue to comply with the applicable federal requirement(s).

BC Based on information and belief formed after reasonable inquiry, the equipment identified in this application will comply with applicable federal requirement(s) that will become effective during the permit term, on a timely basis.

BC Corrected information will be provided to the District when I become aware that incorrect or incomplete information has been submitted.

BC Based on information and belief formed after reasonable inquiry, information and statements in the submitted application package, including all accompanying reports, and required certifications are true accurate and complete.

I declare, under penalty of perjury under the laws of the state of California, that the forgoing is correct and true:

Bruce Cogswell
Signature of Responsible Official

5/5/11
Date

Bruce Cogswell
Name of Responsible Official (please print)

V.P. Manufacturing
Title of Responsible Official (please print)

Kern Oil & Refining Co.
7724 E. PANAMA LANE
BAKERSFIELD, CALIFORNIA 93307-9210
(661) 845-0761 FAX (661) 845-0330

RECEIVED
MAY 25 2011
SJVAPCD
Southern Region

May 20, 2011

RUE

Mr. Leonard Scandura
SJVAPCD
34946 Flyover Court
Bakersfield, CA 93308

for proj 1111779

Subject: Kern Oil & Refining Co. – Compliance Certification

Dear Mr. Scandura:

District Rule 2201, Section 4.15.2, requires that an owner or operator proposing a Federal Major Modification certify that all major stationary sources owned or operated by such person (or by any entity controlling, controlled by, or under common control with such person) in California are either in compliance or on a schedule for compliance with all applicable emission limitations and standards. This letter certifies compliance for Kern Oil & Refining Co.

Kern Oil & Refining Co. (Kern) is the sole owner and operator of a petroleum refining facility, ID S-37, located at 7724 E. Panama Lane in Bakersfield, CA. Kern has Notices of Violation outstanding; however all issues associated with these are currently being addressed.

This certification is made on information and belief and is based upon a review of Kern's major source facility by employees who have responsibility for compliance and environmental requirements. This certification is as of the date of its execution.

If you have any questions, please call Melinda Hicks or Robert Richards at (661) 845-0761.

Sincerely,

Bruce Cogswell

Bruce Cogswell
VP Manufacturing

cc: Robert Richards
Melinda Hicks

Attachment VII
HRA

San Joaquin Valley Air Pollution Control District
Risk Management Review

To:	Richard Edgehill – Permit Services
From:	Yu Vu – Technical Services
Date:	June 28, 2011
Facility Name:	Kern Oil & Refining Company
Location:	7724 E. Panama Lane, Bakersfield, CA 93307
Application #(s):	S-37-8-29 and -147-0
Project #:	S-1111779

A. RMR SUMMARY

RMR Summary			
Categories	**Loading Rack (Unit 147-0)**	**Project Totals**	**Facility Totals**
Prioritization Score	0.29	0.29	>1.0
Acute Hazard Index	0.00	0.00	0.83
Chronic Hazard Index	0.00	0.00	0.26
Maximum Individual Cancer Risk (10^{-6})	0.55	0.55	9.42
T-BACT Required?	**No**		
Special Permit Conditions?	**No**		

Proposed Permit Conditions

To ensure that human health risks will not exceed District allowable levels; the following permit conditions must be included for:

Units # 8-29 and 147-0

No special conditions are required.

B. RMR REPORT

I. Project Description

Technical Services received a request on June 15, 2011, to perform a Risk Management Review for a proposed modification to an organic liquid loading rack. The applicant is proposing to allow the use of a wider range of organic liquids for unit 8-29. This modification will not result in an increase in emissions and therefore will not need any further analyses. Unit 147-0 is a loading rack that was previously permit exempt and is now being permitted. It will unload the same types of liquids as those in unit 8-29 and will result in an increase in emissions which will require further evaluation.

II. Analysis

Technical Services performed a health risk assessment using the Toxic Fugitive Emissions from Oilfield Equipment (Heavy Crude Oil). The cumulative prioritization scores for the facility were greater than 1.0, thus modeling was conducted using the AERMOD model, with the parameters outlined below and meteorological data for 2005-2009 from Bakersfield to determine the dispersion factors (i.e., the predicted concentration or X divided by the normalized source strength or Q) for a receptor grid.

Analysis Parameters Unit 147-0			
Source Type	Area	**Location Type**	Urban
X-Length (m)	3.05	**Closest Receptor (m)**	211
Y-Length (m)	11.89	**Type of Receptor**	Residential
Release Height (m)	0.30	**Pollutant Type**	VOC
		Emission Rate	0.13 lb/hr

III. Conclusion

The acute and chronic indices are below 1.0 and the cancer risk factor associated with the organic liquid loading rack is less than 1.0 in a million. **In accordance with the District's Risk Management Policy, the project is approved without Toxic Best Available Control Technology (T-BACT).**

These conclusions are based on the data provided by the applicant and the project engineer. Therefore, this analysis is valid only as long as the proposed data and parameters do not change.

Attachments:

A. RMR request from the project engineer
B. Additional information from the applicant/project engineer
C. Toxic emissions summary
D. Prioritization score

Attachment VIII
Draft ATCs

San Joaquin Valley
Air Pollution Control District

AUTHORITY TO CONSTRUCT

DRAFT

PERMIT NO: S-37-8-29 **ISSUANCE DATE:** DRAFT

LEGAL OWNER OR OPERATOR: KERN OIL & REFINING COMPANY
MAILING ADDRESS: 7724 E PANAMA LANE
BAKERSFIELD, CA 93307-9210

LOCATION: PANAMA LN & WEEDPATCH HWY
BAKERSFIELD, CA 93307-9210

SECTION: 25 **TOWNSHIP:** 30S **RANGE:** 28E

EQUIPMENT DESCRIPTION:
MODIFICATION OF ORGANIC LIQUID LOADING AREAS AND REFINERY VAPOR RECOVERY SYSTEM INCLUDING COMPRESSOR(S), LOADING RACKS WITH UP TO 22 PRODUCT LINES AND UP TO 18 VAPOR RECOVERY LINES: CLARIFY THAT TRANSFER RACKS N AND F MAY BE USED FOR LOADING AND UNLOADING

CONDITIONS

1. {1830} This Authority to Construct serves as a written certificate of conformity with the procedural requirements of 40 CFR 70.7 and 70.8 and with the compliance requirements of 40 CFR 70.6(c). [District NSR Rule] Federally Enforceable Through Title V Permit
2. {1831} Prior to operating with modifications authorized by this Authority to Construct, the facility shall submit an application to modify the Title V permit with an administrative amendment in accordance with District Rule 2520 Section 5.3.4. [District Rule 2520, 5.3.4] Federally Enforceable Through Title V Permit
3. Transfer Racks N and F may be used for loading and unloading. Transfer Racks A, K, and L shall be used only for loading. [District Rule 2201] Federally Enforceable Through Title V Permit
4. All liquids and gases from the transfer operation shall be routed to one of the following systems: a vapor collection and control system; a fixed roof container that meets the control requirements specified in Rule 4623 (Storage of Organic Liquids); a floating roof container that meets the control requirements specified in Rule 4623 (Storage of Organic Liquids); or a pressure vessel equipped with an APCO-approved vapor recovery system that meets the control requirements specified in Rule 4623 (Storage of Organic Liquids); or a closed VOC emission control system. [District Rules 4623 and 4624] Federally Enforceable Through Title V Permit

CONDITIONS CONTINUE ON NEXT PAGE

YOU MUST NOTIFY THE DISTRICT COMPLIANCE DIVISION AT (661) 392-5500 WHEN CONSTRUCTION IS COMPLETED AND PRIOR TO OPERATING THE EQUIPMENT OR MODIFICATIONS AUTHORIZED BY THIS AUTHORITY TO CONSTRUCT. This is NOT a PERMIT TO OPERATE. Approval or denial of a PERMIT TO OPERATE will be made after an inspection to verify that the equipment has been constructed in accordance with the approved plans, specifications and conditions of this Authority to Construct, and to determine if the equipment can be operated in compliance with all Rules and Regulations of the San Joaquin Valley Unified Air Pollution Control District. Unless construction has commenced pursuant to Rule 2050, this Authority to Construct shall expire and application shall be cancelled two years from the date of issuance. The applicant is responsible for complying with all laws, ordinances and regulations of all other governmental agencies which may pertain to the above equipment.

Seyed Sadredin, Executive Director / APCO

DRAFT

DAVID WARNER, Director of Permit Services
8-37-8-29 : Jul 12 2011 10:11AM – EDGEHILR : Joint Inspection NOT Required

5. A floating roof container that meets the applicable control requirements of Section 5.0 of Rule 4623 (Storage of Organic Liquids) shall be considered not leaking when receiving unloaded liquids for compliance with Rule 4624. [District Rule 4624] Federally Enforceable Through Title V Permit

6. For the transfer of gasoline only, transfer to any stationary storage container with 250 gallon capacity or more shall not be allowed unless the container is equipped with a permanent submerged fill pipe and an ARB certified Phase I vapor recovery system, which is maintained and operated according to the manufacturers specifications, or a vapor recovery system with 95% control approved by the District. [District Rule 4621] Federally Enforceable Through Title V Permit

7. All delivery tanks which previously contained organic liquids, including gasoline, with a TVP greater than 1.5 psia at loading conditions shall be filled only at Class 1 or Class 2 loading facilities that meet the vapor collection and control requirements of District Rule 4624 or listed herein. [District Rule 4624] Federally Enforceable Through Title V Permit

8. Construction, reconstruction (as defined in District Rule 4001, amended January 19, 1995), or expansion of any top loading facility shall not be allowed. [District Rule 4624] Federally Enforceable Through Title V Permit

9. The organic liquid and gasoline loading operation shall be equipped with bottom loading equipment with a vapor collection and control system meeting the requirements listed in this permit. [District Rules 4621 and 4624] Federally Enforceable Through Title V Permit

10. Transfer rack and vapor collection and control equipment shall be designed, installed, maintained in accordance with the manufacturers specifications, and operated such that there are no leaks or excess organic liquid drainage at disconnections as defined herein. [District Rules 4621 and 4624] Federally Enforceable Through Title V Permit

11. For gasoline delivery vessels, a leak shall be defined as the dripping of VOC-containing liquid at a rate of more than three drops per minute or a reading greater than 100 percent of the Lower Explosive Limit (21,000 ppmv as propane) in accordance with EPA Method 21. [District Rule 4621]

12. For components used in the gasoline loading operation, a leak shall be defined as the dripping of VOC-containing liquid at a rate of more than three drops per minute or the detection of organic compounds, in excess of 10,000 ppm as methane measured at a distance of one centimeter from the potential source in accordance with EPA Method 21. Excess liquid drainage shall be defined as exceeding 10 mls per average of 3 consecutive disconnects. [District Rules 4621 and 4624]

13. For delivery vessels and components used in the organic liquid transfer operation, a leak shall be defined as the detection of organic compounds, in excess of 1,000 ppm as methane measured at a distance of one centimeter from the potential source in accordance with EPA Method 21. [District Rule 4624]

14. Equipment under vapor control shall not vent to atmosphere. [District Rules 4621 and 4624.] Federally Enforceable Through Title V Permit

15. VOC emission rate from diesel loading rack shall not exceed any of the following: Fugitive emissions: 0.12 lb/hr and vapor recovery system: 0.09 lb/hr. [District Rule 2201] Federally Enforceable Through Title V Permit

16. VOC emission rate from fugitive components associated with the refinery vapor control system shall not exceed 6.9 lb/day. [District Rule 2201] Federally Enforceable Through Title V Permit

17. The vapor collection and control system shall operate such that VOC emissions do not exceed 0.08 lb/1000 gallons of organic liquid loaded with greatest vapor pressure loaded; maintains at least 95% capture and control efficiency of VOC and which operates so the delivery tank does not exceed 18 inches water column pressure nor 6 inches water. column vacuum. [District Rule 4624] Federally Enforceable Through Title V Permit

18. No gasoline delivery vessel shall be used or operated unless it is vapor tight. No gasoline delivery vessel shall be operated or loaded unless valid State of California decals are displayed on the cargo tank, attesting to the vapor integrity of the tank as verified by annual performance of CARB required Certification and Test Procedures for Vapor Recovery Systems for Cargo Tanks (Executive Order G-70-10-A) or EPA Method 27 for testing delivery vessels owned or operated by this facility. [District Rule 4621, 5.2.1 & 5.2.2, Health & Safety Code, section 41962, and CCR, Title 17 section 94004] Federally Enforceable Through Title V Permit

19. Measurements of leak concentrations for organic liquid delivery vessels, including gasoline, shall be conducted according to the ARB Test Procedure for Determination of Leaks, TP-204.3, or EPA Method 21. [District Rules 4621 and 4624] Federally Enforceable Through Title V Permit

CONDITIONS CONTINUE ON NEXT PAGE

20. During loading of a delivery vessel, the truck-mounted vapor return line shall be connected to the vapor recovery system listed on this permit. [District Rules 2201 and 4621] Federally Enforceable Through Title V Permit

21. A delivery vessel loading gasoline shall discontinue if its pressure relief valve opens. Corrective action shall be taken should this condition occur. [District Rules 2520 and 4621] Federally Enforceable Through Title V Permit

22. Switch loading shall not be conducted unless such transfer is made using the vapor recovery system. [District Rules 2201 and 4621] Federally Enforceable Through Title V Permit

23. Operators shall conduct all performance tests required by the facility installation and operations manual as per the frequency outlined therein or as designated by the APCO. [District Rules 46211 and 4624] Federally Enforceable Through Title V Permit

24. The vapor recovery system shall be performance tested within 60 days of completion of installation or modification. The District shall be notified by the permittee 7 days prior to each test. The test results shall be submitted to the District no later than 30 days after each test. [District Rule s 1081 and 4621] Federally Enforceable Through Title V Permit

25. VOC emissions from the vapor collection and control system shall be determined annually using 40CFR$^{\perp}$ 60.503. "Test Methods and Procedures" and EPA Reference Methods 2A, 2B, 25A and 25B and ARB Method 432, or ARB Method TP 203-1. [District Rule 4624] Federally Enforceable Through Title V Permit

26. Analysis of halogenated exempt VOC compounds shall be by ARB Method 432. [District Rule 4624] Federally Enforceable Through Title V Permit

27. The permittee shall conduct and record maintenance inspections of the loading and vapor recovery equipment using sight, sound, and smell to detect leaks five days per week. [District Rules 4621 and 4624] Federally Enforceable Through Title V Permit

28. The operator shall perform and record the results of monthly leak and drainage inspections of the loading and vapor collection equipment at each loading arm. During the loading of gasoline or organic liquids, leak detection shall be conducted using EPA Method 21 measuring at a distance of one centimeter from the potential source. When not in current operation, excess drainage inspections shall be conducted before 10:00 am at the disconnect of each loading arm by collecting all drainage at disconnect in a container and determining the volume within one (1) minute of collection [District Rules 2520, 40 CFR 60.502(j) and 4624] Federally Enforceable Through Title V Permit

29. The leak detection instrument shall be calibrated each day of its use, prior to use, by the procedures specified in Method 21 using the following calibration gases: A) Zero air (less than 10 ppm of hydrocarbon in air); and B) Mixture of methane or n-hexane and air at a concentration of about, but less than, 10,000 ppm methane or n-hexane. [District Rules 2520, 9.3.2 and 4624] Federally Enforceable Through Title V Permit

30. Corrective steps shall be taken at any time the operator observes a leak or excess drainage at disconnect. All equipment found leaking shall be repaired or replaced within 72 hours. If the leaking component cannot be repaired or replaced within 72 hours, the component shall be taken out of service until such time the component is repaired or replaced. The repaired or replacement equipment shall be reinspected the first time the equipment is in operation after the repair or replacement. [District Rule 4624] Federally Enforceable Through Title V Permit

31. All inspections shall be documented within the inspection log. Inspection records shall include, at a minimum, 1) date of inspection, 2) location and description of any missing, loose, leaking, or damaged equipment and any malfunction requiring repair, 3) corrective steps taken to repair or replace the equipment, 4) test method and results for leak and drainage inspections, 5) location and description of any of equipment which shall be inspected upon commencing operation after repair or replacement and 6) inspector name and signature. [District Rules 4621 and 4624] Federally Enforceable Through Title V Permit

32. Records of daily throughput of each loading rack shall be maintained and made available to the APCO, ARB, or EPA during normal business hours. [District Rules 2201, 4621, and 4624] Federally Enforceable Through Title V Permit

33. The permittee shall maintain accurate records of exempt and non-exempt components and their associated function in the Operator Management Plan (OMP) as required in section 6.1 of Rule 4455. Permit holder shall update the Operator Management Plan when new components are installed. By January 30 of each year, an annual report indicating any changes to an existing Operator Management Plan shall be submitted to the APCO. [District Rule 4455] Federally Enforceable Through Title V Permit

CONDITIONS CONTINUE ON NEXT PAGE

34. Permit holder shall maintain accurate component count and resultant emissions according to CAPCOA's "California Implementation Guidelines for Estimating Mass Emissions of Fugitive Hydrocarbon Leaks at Petroleum Facilities," Table IV-3a (Feb 1999), CAPCOA-Revised 1995 EPA Correlation Equations and Factors for Refineries and Marketing Terminals. Components shall be screened and leak rate shall be measured at least once each quarter. If compliance with the daily emission limit is shown during each of five (5) consecutive quarterly inspections, the inspection frequency may be changed from quarterly to annual. If any annual inspection shows non-compliance with the daily emission limit, then quarterly inspections shall be resumed. [District Rules 2201, District Rule 4455] Federally Enforceable Through Title V Permit

San Joaquin Valley
Air Pollution Control District

AUTHORITY TO CONSTRUCT

DRAFT

PERMIT NO: S-37-147-0

ISSUANCE DATE: DRAFT

LEGAL OWNER OR OPERATOR: KERN OIL & REFINING COMPANY
MAILING ADDRESS: 7724 E PANAMA LANE
BAKERSFIELD, CA 93307-9210

LOCATION: PANAMA LN & WEEDPATCH HWY
BAKERSFIELD, CA 93307-9210

EQUIPMENT DESCRIPTION:
ORGANIC LIQUID UNLOADING RACK (RACK S) - SOUTH OF DIESEL TANK FARM

CONDITIONS

1. {1830} This Authority to Construct serves as a written certificate of conformity with the procedural requirements of 40 CFR 70.7 and 70.8 and with the compliance requirements of 40 CFR 70.6(c). [District NSR Rule] Federally Enforceable Through Title V Permit
2. {1831} Prior to operating with modifications authorized by this Authority to Construct, the facility shall submit an application to modify the Title V permit with an administrative amendment in accordance with District Rule 2520 Section 5.3.4. [District Rule 2520, 5.3.4] Federally Enforceable Through Title V Permit
3. Transfer Rack S shall be used only for unloading. [District Rule 2201] Federally Enforceable Through Title V Permit
4. No air contaminant shall be released into the atmosphere which causes a public nuisance. [District Rule 4102] Federally Enforceable Through Title V Permit
5. Transfer rack shall be maintained and operated in accordance with the manufacturer's specifications, and operated such that there are no leaks or excess organic liquid drainage at disconnections as defined herein. [District Rule 4624] Federally Enforceable Through Title V Permit
6. All liquids and gases from the transfer operation shall be routed to one of the following systems: a vapor collection and control system; a fixed roof container that meets the control requirements specified in Rule 4623 (Storage of Organic Liquids); a floating roof container that meets the control requirements specified in Rule 4623 (Storage of Organic Liquids); or a pressure vessel equipped with an APCO-approved vapor recovery system that meets the control requirements specified in Rule 4623 (Storage of Organic Liquids); or a closed VOC emission control system. [District Rules 4623 and 4624] Federally Enforceable Through Title V Permit

CONDITIONS CONTINUE ON NEXT PAGE

YOU MUST NOTIFY THE DISTRICT COMPLIANCE DIVISION AT (661) 392-5500 WHEN CONSTRUCTION IS COMPLETED AND PRIOR TO OPERATING THE EQUIPMENT OR MODIFICATIONS AUTHORIZED BY THIS AUTHORITY TO CONSTRUCT. This is NOT a PERMIT TO OPERATE. Approval or denial of a PERMIT TO OPERATE will be made after an inspection to verify that the equipment has been constructed in accordance with the approved plans, specifications and conditions of this Authority to Construct, and to determine if the equipment can be operated in compliance with all Rules and Regulations of the San Joaquin Valley Unified Air Pollution Control District. Unless construction has commenced pursuant to Rule 2050, this Authority to Construct shall expire and application shall be cancelled two years from the date of issuance. The applicant is responsible for complying with all laws, ordinances and regulations of all other governmental agencies which may pertain to the above equipment.

Seyed Sadredin, Executive Director / APCO

DRAFT

DAVID WARNER, Director of Permit Services
S-37-147-0 : Jul 12 2011 10:09AM -- EDGEHILR : Joint Inspection NOT Required

7. A floating roof container that meets the applicable control requirements of Section 5.0 of Rule 4623 (Storage of Organic Liquids) shall be considered not leaking when receiving unloaded liquids for compliance with Rule 4624. [District Rule 4624] Federally Enforceable Through Title V Permit

8. Total number of disconnects shall not exceed 20 per day. [District Rule 2201] Federally Enforceable Through Title V Permit

9. During hose disconnects the maximum liquid spillage for liquids shall not exceed 10 milliliters/disconnect based on an average from 3 consecutive disconnects. [District Rule 2201 and 4624] Federally Enforceable Through Title V Permit

10. Emissions from light liquid components shall not exceed 3.1 lb-VOC/day. [District Rule 2201] Federally Enforceable Through Title V Permit

11. Permittee shall maintain accurate component count and emissions calculated using CAPCOA Average Emission Factors for Marketing Terminals, from California Implementation Guidelines for Estimating Emissions of Fugitive Hydrocarbon Leaks at Marketing Terminals, Table IV-2b, February 1999. [District Rule 2201] Federally Enforceable Through Title V Permit

12. For this Class 1 organic liquid transfer operation, the emission of VOC from the transfer operation shall not exceed 0.08 pounds per 1,000 gallons of organic liquid transferred. [District Rule 4624] Federally Enforceable Through Title V Permit

13. A leak is defined as the dripping of VOC-containing liquid at a rate of more than three (3) drops per minute; or for organic liquids other than gasoline, the detection of any gaseous or vapor emissions with a concentration of VOC greater than 1,000 ppmv above a background as methane when measured in accordance with the test method in Section 6.3.8 or alternative method approved in writing by the APCO and EPA. Any liquid or gas coming from a component undergoing repair or replacement, or during sampling of process fluid from equipment into a container is not considered a leak provided such activities are accomplished as expeditiously as possible and with minimal spillage of material and VOC emissions to the atmosphere. [District Rule 4624] Federally Enforceable Through Title V Permit

14. Permittee shall inspect the loading rack for leaks during transfer at least once every calendar quarter using the test method prescribed in Section 6.3.8 of Rule 4624 or alternative method approved in writing by the APCO and EPA. [District Rule 4624] Federally Enforceable Through Title V Permit

15. An operator may apply for a written approval from the APCO to change the inspection frequency from quarterly to annually provided no leaks were found during the inspections required under provisions of Sections 5.9.1 and 5.9.2 of Rule 4624 during five consecutive quarterly inspections. Upon identification of any leak during an annual inspection the frequency shall revert back to quarterly and the operator shall contact the APCO in writing within 14 days. [District Rule 4624] Federally Enforceable Through Title V Permit

16. Corrective steps shall be taken at any time the operator observes a leak or excess drainage at disconnect. All equipment found leaking shall be repaired or replaced within 72 hours. If the leaking component cannot be repaired or replaced within 72 hours, the component shall be taken out of service until such time the component is repaired or replaced. The repaired or replaced equipment shall be reinspected the first time the equipment is in operation after the repair or replacement. [District Rule 4624] Federally Enforceable Through Title V Permit

17. All inspections shall be documented with an inspection log. Inspection records shall include, at a minimum, 1) date of inspection, 2) location and description of any missing, loose, leaking, or damaged equipment and any malfunction requiring repair, 3) corrective steps taken to repair or replace the equipment, 4) test method and results for leak and drainage inspections, 5) location and description of any equipment to be inspected upon commencing operation after repair or replacement and 6) inspector name and signature. [District Rule 4624] Federally Enforceable Through Title V Permit

18. Permittee shall keep records of daily unloading rack throughput and the results of any required leak inspections. [District Rule 4624] Federally Enforceable Through Title V Permit

19. Permittee shall keep records of daily number of truck unloading disconnects. [District Rules 1070 and 2201] Federally Enforceable Through Title V Permit

20. Records shall be retained for a minimum of five years and shall be made readily available to the APCO, ARB, or EPA during normal business hours and submitted upon request to the APCO, ARB, or EPA. [District Rules 1070 and 4624] Federally Enforceable Through Title V Permit

CONDITIONS CONTINUE ON NEXT PAGE

21. Prior to operating equipment under this Authority to Construct, permittee shall surrender VOC emission reduction credits for the following quantity of emissions: 1st quarter - 418 lb, 2nd quarter - 418 lb, 3rd quarter - 418 lb, and fourth quarter - 418 lb. Offsets include the applicable offset ratio specified in Section 4.8 of Rule 2201 (as amended 4/21/11). [District Rule 2201] Federally Enforceable Through Title V Permit

22. ERC Certificate Number S-2882-1 (or a certificate split from this certificate) shall be used to supply the required offsets, unless a revised offsetting proposal is received and approved by the District, upon which this Authority to Construct shall be reissued, administratively specifying the new offsetting proposal. Original public noticing requirements, if any, shall be duplicated prior to reissuance of this Authority to Construct. [District Rule 2201] Federally Enforceable Through Title V Permit